YAMAHA

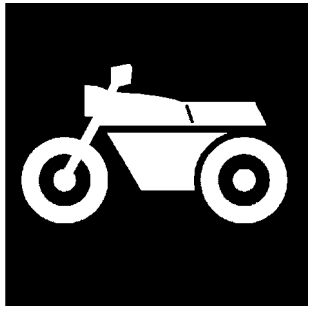

PARTS CATALOGUE
CATALOGO DE REPUESTOS

FZH150 (B733) COLOMBIA

1RB73-261SA

( )

YAMAHA GENUINE Parts & Accessories

2016/7/22

NEWS NO.	DATE	COMMENT
PE0-MC-160078	Jul.,14,2016	COR:FIG.40 ELECTRICAL 2 LIST CORRECTION

FZH150
CATALOGO DE REPUESTOS
©2016 por Yamaha Motor Co., Ltd.
1ª edición, abril 2016
Todos los derechos reservados.
Toda reproducción o uso no autorizado
sin el consentimiento escrito de
Yamaha Motor Co., Ltd.
quedan expresamente prohibidos
Impreso en Japón.

FZH150
PARTS CATALOGUE
©2016 by Yamaha Motor Co., Ltd.
1st edition, April 2016
All rights reserved.
Any reprinting or unauthorized use
without the written permission of
Yamaha Motor Co., Ltd.
is expressly prohibited.
Printed in Japan.

PROLOGO

Este catálogo de repuestos corresponde a las piezas para el o los modelos que figuran en la página de portada. Al formular el pedido de repuestos, se ruega citar este catálogo y especificar correctamente el número y el nombre de las piezas.

1. Las modificaciones y agregados que se hayan realizado después de la edición de este Catálogo de Repuestos, serán anunciados en las Informaciones de Recambios.
   Es recomendable que se hagan las correcciones necesarias en el Catálogo de Repuestos de acuerdo con las Informaciones de Recambios.

2. Abreviaciones
   En este. Catálogo de Repuestos se emplean las siguientes abreviaciones.

   “UR” Usar el número de partes especificado

   “UN” Usar la cantidad necesaria

   “AP” Piezas sustitutivas

   “LM” Fabricación local (Hay que pedir los repuestos en las cercanías)

   “F#” Nº de bastidor (Nº aplicable a la máquina)

   “O/S” Sobredimensionado

3. La cantidad de componentes para el montaje
   - Los componentes, suministrados como conjunto, se describen con un punto (.) que precede al nombre del parte como se indica a continuación.
   - La numeración que aparece a la derecha de cada descripción indica la cantidad de partes por cada unidad de conjunto.

CODIGO Nº	DESCRIPCION	CANT.	OBSERVACIONES
2F5–83310–60	ENSAMBLAJE DE LA LUZ	2	
115–83311–60	.BOMBILLA (6V–18W)	1	

4. Los colores de los componentes se indican como sigue en la columna de “OBSERVACIONES”.

CODIGO Nº	DESCRIPCION	CANT.	OBSERVACIONES
2N4–24110–00–X5	COMP. DEL TANQUE	2	MXR
3J1–24240–10	.GRAFICO, DEL TANQUE	1	PARA MXR

5. Debe tenerse en cuenta que las ilustraciones sirven como guia para la búsqueda de los números de partes y no deben usarse para el montaje. Durante el montaje, se recomienda usar el manual de taller correspondiente.

6. EL asterisco (*) antes del número de referencia indica los elementos modificados después de la primera edición.

FOREWORD

This Parts Catalogue is related to the parts for the model(s) on the cover page. When you are ordering replacement parts, please refer to this Parts Catalogue and quote both part numbers and part names correctly.

1. Modifications or additions which have been made after the issue of the Parts Catalogue will be announced in the Parts News.
   It is advisable that you make the necessary corrections to the Parts Catalogue according to the Parts News.

2. Abbreviations
   The following abbreviations are used in this Parts Catalogue.

   "UR" Use specified parts number.

   "UN" Use as many as needed.

   "AP" Alternate Parts

   "LM" Locally Made (Parts need to be ordered locally)

   "F#" Frame No. (Applicable machine No.)

   "O/S" Over Size

3. The number of components for assembly
   - Parts, which are to be supplied in an assembly, are listed with a dot (.) in front of the part name as shown below.
   - The numeral appearing to the right of each component part indicates the quantity of parts for each assembly unit.

PART NO.	DESCRIPTION	Q'TY	REMARKS
2F5–83310–60	FRONT FLASHER LIGHT ASSY	2	
115–83311–60	.BULB (6V–18W)	1	

4. Applicable colours of graphics are represented in the "REMARKS" as shown below.

PART NO.	DESCRIPTION	Q'TY	REMARKS
2N4–24110–00–X5	FUEL TANK COMP.	2	MXR
3J1–24240–10	.GRAPHIC, FUEL TANK	1	FOR MXR

5. Note that the illustrations for reference in finding parts numbers are not to be used for assembling. When assembling, please use the applicable service manual.

6. The asterisk (*) before a reference number indicates modified items after the first edition.

7. Números de serie

Nº de Serie del bastidor

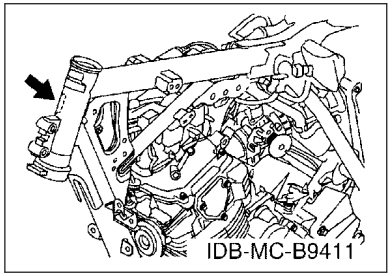

Nº de Serie del motor

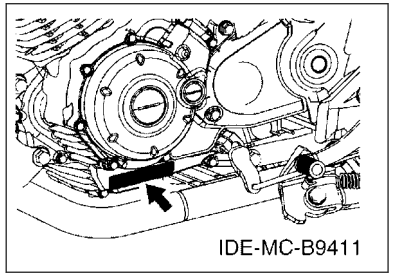

8. Códigos de color aplicables (El símbolo (*) muestra el color de modelo.)

Abreviatura	Nombre de color	Código de color
BWC1(*)	BLUISH WHITE COCKTAIL 1	0390
DPBML	DARK PURPLISH BLUE METALLIC L	0865
S3	SILVER 3	0791
S8	SILVER 8	0895
VRC1(*)	VIVID RED COCKTAIL 1	0121
YB(*)	YAMAHA BLACK	0033

9. Nº de serie inicial aplicable

Nº de Serie del bastidor

Nº de serie	Nombre de la columna de cantidades	Código de Modelo

Nº de Serie del motor

Nº de serie	Nombre de la columna de cantidades	Código de Modelo

7. Applicable Serial No.

Frame Serial No.

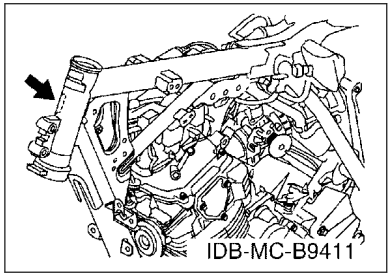

Engine Serial No.

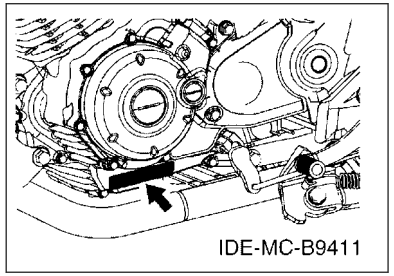

8. Applicable Colour Code (The (*) mark shows Model colour.)

Abbreviation	Colour Name	Colour Code
BWC1(*)	BLUISH WHITE COCKTAIL 1	0390
DPBML	DARK PURPLISH BLUE METALLIC L	0865
S3	SILVER 3	0791
S8	SILVER 8	0895
VRC1(*)	VIVID RED COCKTAIL 1	0121
YB(*)	YAMAHA BLACK	0033

9. Applicable Starting Serial No.

Frame Serial No.

Serial No.	Name Of Q'ty Column	Model Code

Engine Serial No.

Serial No.	Name Of Q'ty Column	Model Code

CONTENIDO

MOTOR

CILINDRO....1
CIGUENAL & PISTON....2
VALVULA....4
ARBOL DE LEVAS & CADENA....5
BOMBA DE ACEITE....6
ADMISION....7
DESCARGA....9
CARTER....10
CUBIERTA DE CARTER 1....11
EMBRAGUE DEL ARRANQUE....12
EMBRAGUE....13
TRANSMISION....15
LEVA DE CAMBIO & HORQUILLA....17
EJE DE CAMBIO & PEDAL....18

SHASIS

CUADRO....19
GUARDABARRO....20
CUBIERTA LATERAL....21
BRAZO TRASERO & SUSPENSION....23
DIRECCION....25
HORQUILLA DELANTERA....26
DEPOSITO DE COMBUSTIBLE....27
DEPOSITO DE COMBUSTIBLE 2....29
ASIENTO....31
RUEDA DELANTERA....32
CALIBRE FRENO DELANTERA....33
RUEDA TRASERA....34
MANILLAR & CABLE....36
CILINDRO MAESTRO DELANTERO....37
SOPORTE & APOYAPIE....38
SOPORTE & APOYAPIE 2....40
BOVEDA 1....41
GENERADOR....43
MOTOR DE ARRANQUE....44
LUZ DE DESTELLADOR....45
MEDIDOR....47
FARO DELANTERO....48
LUZ DE COLA....49
INTERRUPTOR DE MANILLAR&PALANC....50
EQUIPO ELECTRICO 1....51
EQUIPO ELECTRICO 2....52

INDICE

INDICE NUMERICO....53

CONTENTS

ENGINE

CYLINDER....1
CRANKSHAFT & PISTON....2
VALVE....4
CAMSHAFT & CHAIN....5
OIL PUMP....6
INTAKE....7
EXHAUST....9
CRANKCASE....10
CRANKCASE COVER 1....11
STARTER CLUTCH....12
CLUTCH....13
TRANSMISSION....15
SHIFT CAM & FORK....17
SHIFT SHAFT....18

CHASSIS

FRAME....19
FENDER....20
SIDE COVER....21
REAR ARM & SUSPENSION....23
STEERING....25
FRONT FORK....26
FUEL TANK....27
FUEL TANK 2....29
SEAT....31
FRONT WHEEL....32
FRONT BRAKE CALIPER....33
REAR WHEEL....34
STEERING HANDLE & CABLE....36
FRONT MASTER CYLINDER....37
STAND & FOOTREST....38
STAND & FOOTREST 2....40
COWLING 1....41
GENERATOR....43
STARTING MOTOR....44
FLASHER LIGHT....45
METER....47
HEADLIGHT....48
TAILLIGHT....49
HANDLE SWITCH & LEVER....50
ELECTRICAL 1....51
ELECTRICAL 2....52

INDEX

NUMERICAL INDEX....53

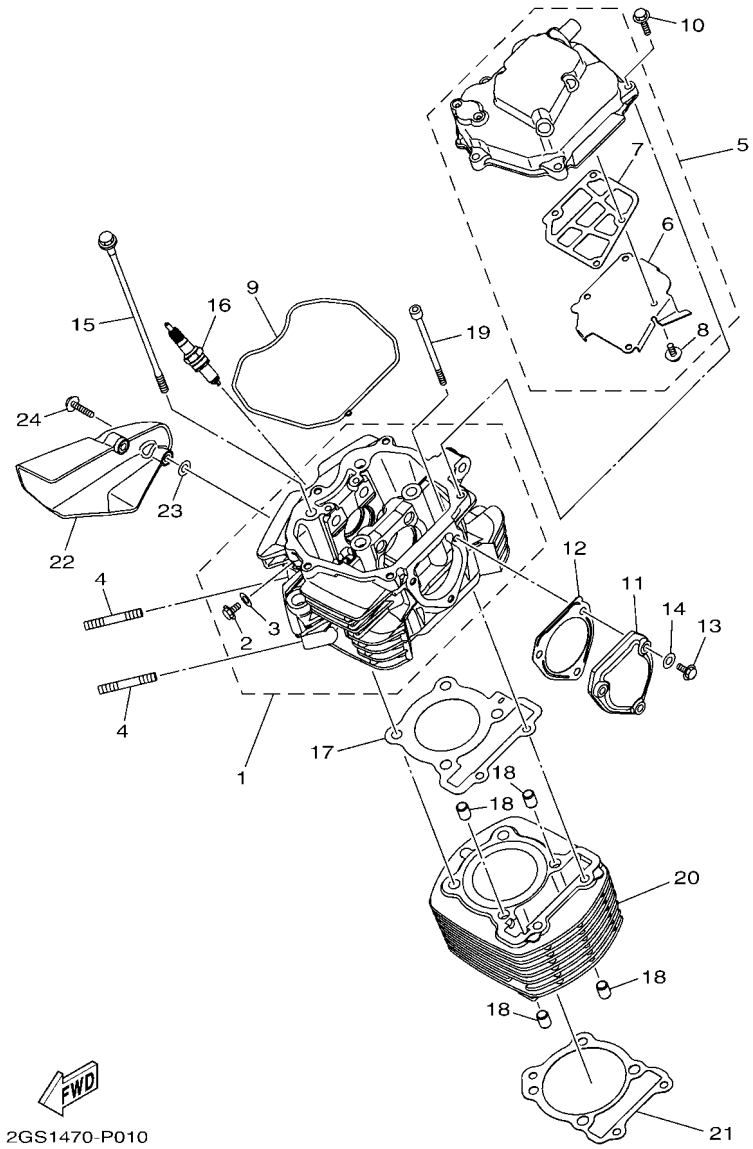

FIG. 1 CILINDRO — CYLINDER

REF. Nº	CODIGO Nº PART NO.	DESCRIPCION DESCRIPTION	B733					OBSERVACIONES REMARKS
1	2GS–E1102–00	CULATA DE CILINDRO COMPLETA CYLINDER HEAD ASSY	1					
2	95022–06012	.PERNO, DE BRIDA .BOLT, FLANGE	1					
3	90430–06817	.JUNTA .GASKET	1					
4	95612–08635	PERNO DE PUNTAL BOLT, STUD	2					
5	2GS–E1190–00	TAPA CULATA DE CILINDRO 1 COVER, CYLINDER HEAD 1	1					
6	2GS–E1165–00	.PLACA RESPIRADERO .PLATE, BREATHER	1					
7	21C–E1169–10	.EMAPQ CBTA.DE RESP. .GASKET, BREATHER COVER	1					
8	90149–05807	.TORNILLO DE REGLAJE .SCREW	4					
9	2GS–E1193–00	EMPAQUE GASKET, HEAD COVER 1	1					
10	95022–06025	PERNO, DE BRIDA BOLT, FLANGE	5					
11	2GS–E1186–00	CUBIERTA CULATA CIL.LAT.2 COVER, CYLINDER HEAD SIDE 2	1					
12	21C–E2435–11	EMPAQUE GASKET	1					
13	95022–06025	PERNO, DE BRIDA BOLT, FLANGE	3					
14	90430–06817	JUNTA GASKET	3					
15	2GS–E1361–00	PERNO RETEN DE CILINDRO 1 BOLT, CYLINDER HOLDING 1	4					
16	94703–00885	BUJIA (NGK CPR8EA) PLUG, SPARK (NGK CPR8EA)	1					
17	2GS–E1181–01	JUNTA, DE CULATA 1 GASKET, CYLINDER HEAD 1	1					
18	91810–14804	PASADOR DE CLAVIJA PIN, DOWEL	4					
19	90110–06304	TORNILLO ALLEN BOLT, HEXAGON SOCKET HEAD	2					
20	2GS–E1310–00	CILINDRO CYLINDER	1					
21	21C–E1351–00	JUNTA, DE CILINDRO GASKET, CYLINDER	1					
22	21C–E2661–10	CONDUCTO DUCT	1					
23	90201–05820	ARANDELA PLANA WASHER, PLATE	2					
24	90110–06256	TORNILLO ALLEN BOLT, HEXAGON SOCKET HEAD	2					

FIG. 2 CIGUENAL & PISTON — CRANKSHAFT & PISTON

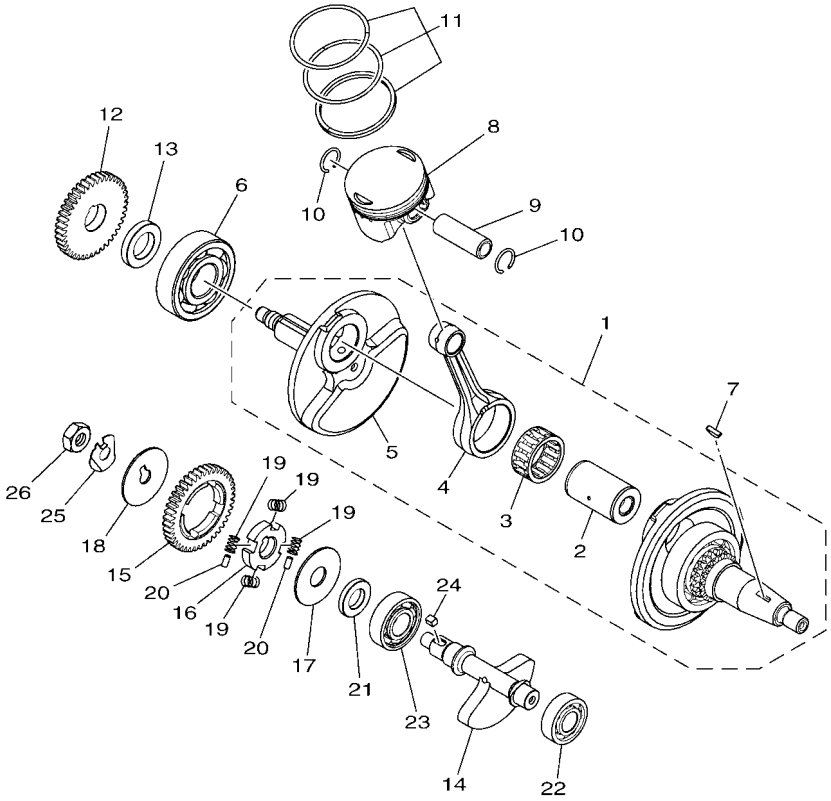

REF. Nº	CODIGO Nº PART NO.	DESCRIPCION DESCRIPTION	B733					OBSERVACIONES REMARKS
1	2GS–E1400–09	CIGUENAL COMPLETO CRANKSHAFT ASSY	1					
2	21C–E1681–01	.PASADOR MANIVELA 1 .PIN, CRANK 1	1					
3	93310–628X0	.COJINETE DE RODILLOS .BEARING	1					
4	2GS–E1651–00	.BIELA .ROD, CONNECTING	1					
5	2GS–E1422–00	.MANIVELA 2 .CRANK 2	1					
6	93306–305YC	COJINETE BEARING	1					
7	90280–03017	CUNA WOODRUFF KEY, WOODRUFF	1					
8	2GS–E1631–00	PISTON (NORMA) PISTON (STD)	1					
	2GS–E1636–09	PISTON (0.50MM O/S) PISTON (0.50MM O/S)	1					AP AP
	2GS–E1638–09	PISTON (1.00MM O/S) PISTON (1.00MM O/S)	1					AP AP
9	21C–E1633–00	PASADOR, PISTON PIN, PISTON	1					
10	93450–16812	SEGURO CIRCLIP	2					
11	2GS–E1603–00	JUEGO DE ANILLOS (NORMA) PISTON RING SET (STD)	1					
	2GS–E1605–00	JUEGO DE ANILLOS (0.50MM O/S) PISTON RING SET (0.50MM O/S)	1					AP AP
	2GS–E1607–00	JUEGO DE ANILLOS (1.00MM O/S) PISTON RING SET (1.00MM O/S)	1					AP AP
12	54B–E1536–01	ENGRANAJE TRACCION GEAR, DRIVE	1					
13	90387–20813	ESPACIADOR COLLAR	1					
14	2GS–E1454–00	PESO 1 WEIGHT 1	1					
15	21C–E1531–01	ENGRANAJE CONTRAPESO GEAR, BALANCE WEIGHT	1					
16	21C–E1496–20	COPA TOPE BOSS, BUFFER	1					
17	90201–15022	ARANDELA PLANA WASHER, PLATE	1					
18	90214–10006	ARANDELA DE POSICION WASHER, CLAW	1					
19	54B–E1476–00	RESORTE SPRING	4					
20	21C–E3362–00	RODILLO ROLLER	2					
21	90387–155J0	ESPACIADOR COLLAR	1					
22	93306–252YG	COJINETE BEARING	1					
23	93306–253Y6	COJINETE BEARING	1					

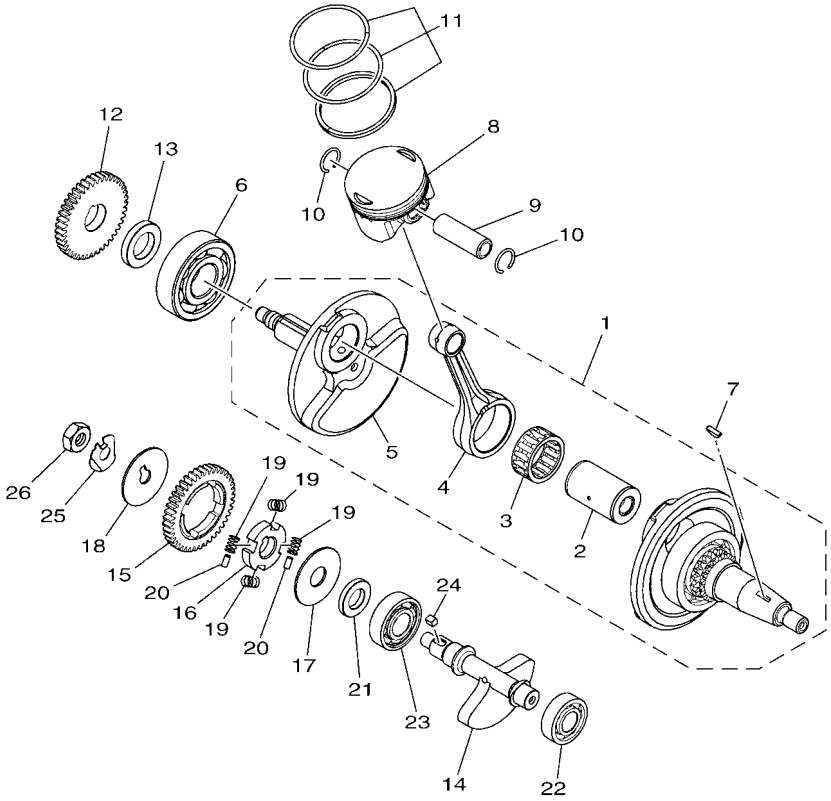

2GS1470-P020

FIG. 2 CIGUENAL & PISTON — CRANKSHAFT & PISTON

REF. Nº	CODIGO Nº PART NO.	DESCRIPCION DESCRIPTION	B733					OBSERVACIONES REMARKS
24	90282–05031	CHAVETA, RECTA KEY, STRAIGHT	1					
25	90215–10284	ARANDELA DE CIERRE WASHER, LOCK	1					
26	90170–10012	TUERCA NUT	1					

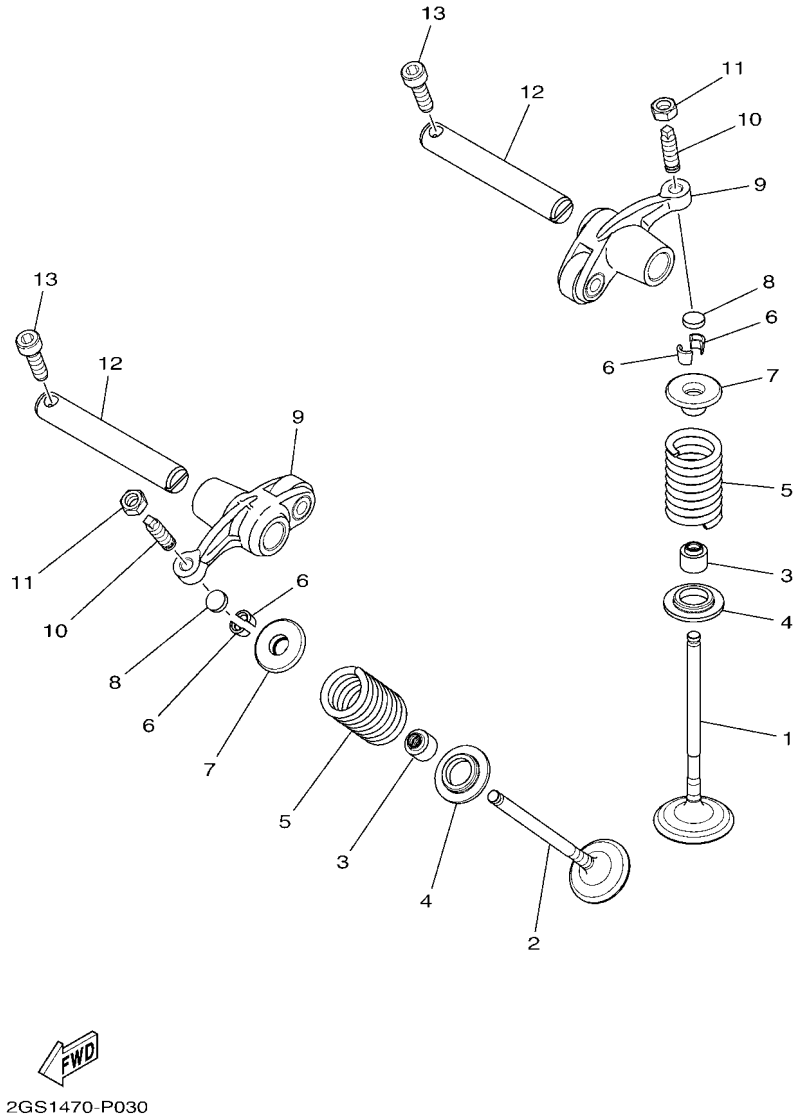

FIG. 3 VALVULA VALVE

REF. Nº	CODIGO Nº PART NO.	DESCRIPCION DESCRIPTION	B733					OBSERVACIONES REMARKS
1	2GS–E2111–00	VALVULA DE ADMISION VALVE, INTAKE	1					
2	2GS–E2121–00	VALVULA DE ESCAPE VALVE, EXHAUST	1					
3	38B–E2119–00	SELLO DE ACEITE VALVULA SEAL, VALVE STEM	2					
4	2GS–E2126–00	ASIENTO RESORTE DE VALVULA2 SEAT, VALVE SPRING 2	2					
5	2GS–E2113–00	RESORTE VALVULA INTERNA SPRING, VALVE INNER	2					
6	3S0–E2118–00	SEGURO DE VALVULA LOCK, VALVE SPRING RETAINER	4					
7	2UP–E2117–00	RETEN RESORTE DE VALVULA RETAINER, VALVE SPRING	2					
8	52S–E2169–10	DISCO DE AJUSTE PAD, ADJUSTING	2					
9	1ST–E2151–00	BRAZO DE BALANCIN DE VALVULA ARM, VALVE ROCKER	2					
10	2GS–12159–00	TORNILLO DE AJUSTE DE VALVULA SCREW, VALVE ADJUSTING	2					
11	90170–05302	TUERCA NUT	2					
12	21C–E2156–00	EJE DE BALANCIN SHAFT, ROCKER 2	2					
13	91312–05016	TORNILLO BOLT	2					

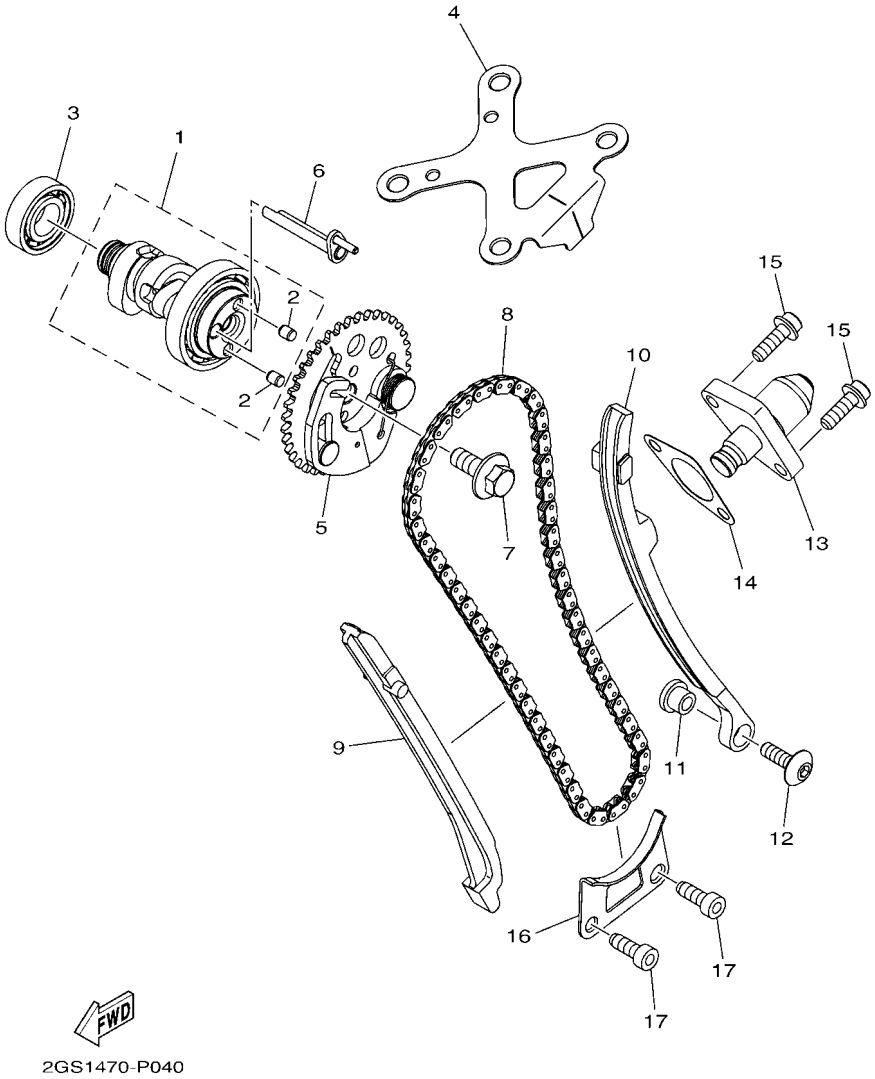

FIG. 4 ARBOL DE LEVAS & CADENA — CAMSHAFT & CHAIN

REF. Nº	CODIGO Nº PART NO.	DESCRIPCION DESCRIPTION	B733					OBSERVACIONES REMARKS
1	2GS–E2170–00	ARBOL DE LEVAS COMPLETO 1 CAMSHAFT ASSY 1	1					
2	93605–06800	.PASADOR DE CLAVIJA .PIN, DOWEL	2					
3	93306–002YV	COJINETE BEARING	1					
4	2GS–E111F–00	PLACA PLATE	1					
5	2GS–E2280–00	EQUIPO DE DESCOMPRESION DECOMPRESSION ASSY	1					
6	1PM–E2288–00	LEVA DE DESCOMPRESION CAM, DECOMPRESSION	1					
7	90105–08196	TORNILLO BOLT, FLANGE	1					
8	94568–G2096	CADENA CHAIN	1					
9	21C–E2231–00	TOPE DE GUIA 1 GUIDE, STOPPER 1	1					
10	2GS–E2241–00	TOPE DE GUIA 2 GUIDE, STOPPER 2	1					
11	4LS–E5598–00	COLLAR COLLAR	1					
12	90149–06829	TORNILLO DE REGLAJE SCREW	1					
13	21C–E2210–02	TENSOR CADENA DE LEVA TENSIONER ASSY, CAM CHAIN	1					
14	2GS–E2213–00	EMPAQUE DE CAJA TENSOR GASKET, TENSIONER CASE	1					
15	90110–06393	TORNILLO ALLEN BOLT, HEXAGON SOCKET HEAD	2					
16	21C–E2437–00	TOPE STOPPER	1					
17	91312–06016	TORNILLO BOLT	2					

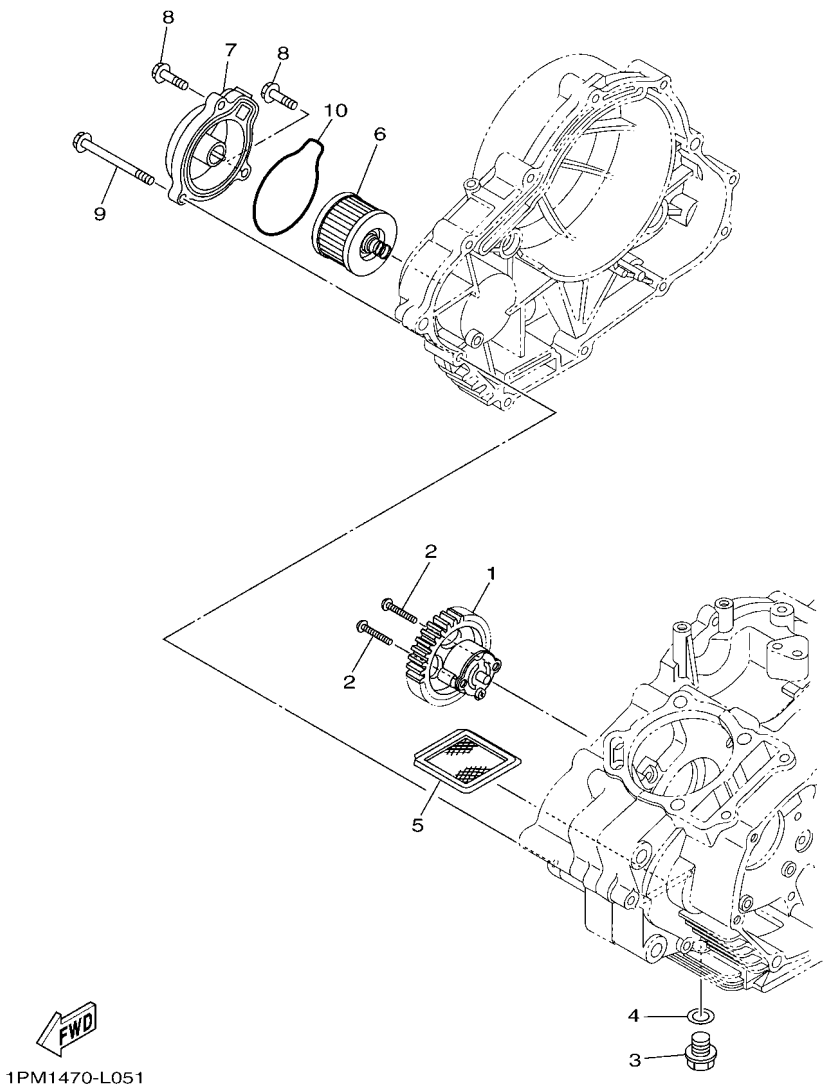

FIG. 5 BOMBA DE ACEITE — OIL PUMP

REF. Nº	CODIGO Nº PART NO.	DESCRIPCION DESCRIPTION	B733					OBSERVACIONES REMARKS
1	54B–E3300–00	BOMBA DE ACEITE COMPLETA OIL PUMP ASSY	1					
2	90111–05035	TORNILLO BOLT,HEX. SOCKET BUTTON	2					
3	90340–12808	TORNILLO, DE DRENAJE PLUG, STRAIGHT SCREW	1					
4	90430–12227	JUNTA GASKET	1					
5	4LS–E3411–00	FILTRO DE ACEITE STRAINER, OIL	1					
6	21C–E3440–00	ELEMENTO FILTRO DE ACEITE ELEMENT ASSY, OIL CLEANER	1					
7	21C–E3447–00	TAPA DEL ELEMENTO COVER, OIL ELEMENT	1					
8	95022–06020	PERNO, DE BRIDA BOLT, FLANGE	2					
9	95022–06065	PERNO, DE BRIDA BOLT, FLANGE	1					
10	21C–E3449–00	JUNTA DE TAPA DE ELEMENTO GASKET, ELEMENT COVER	1					

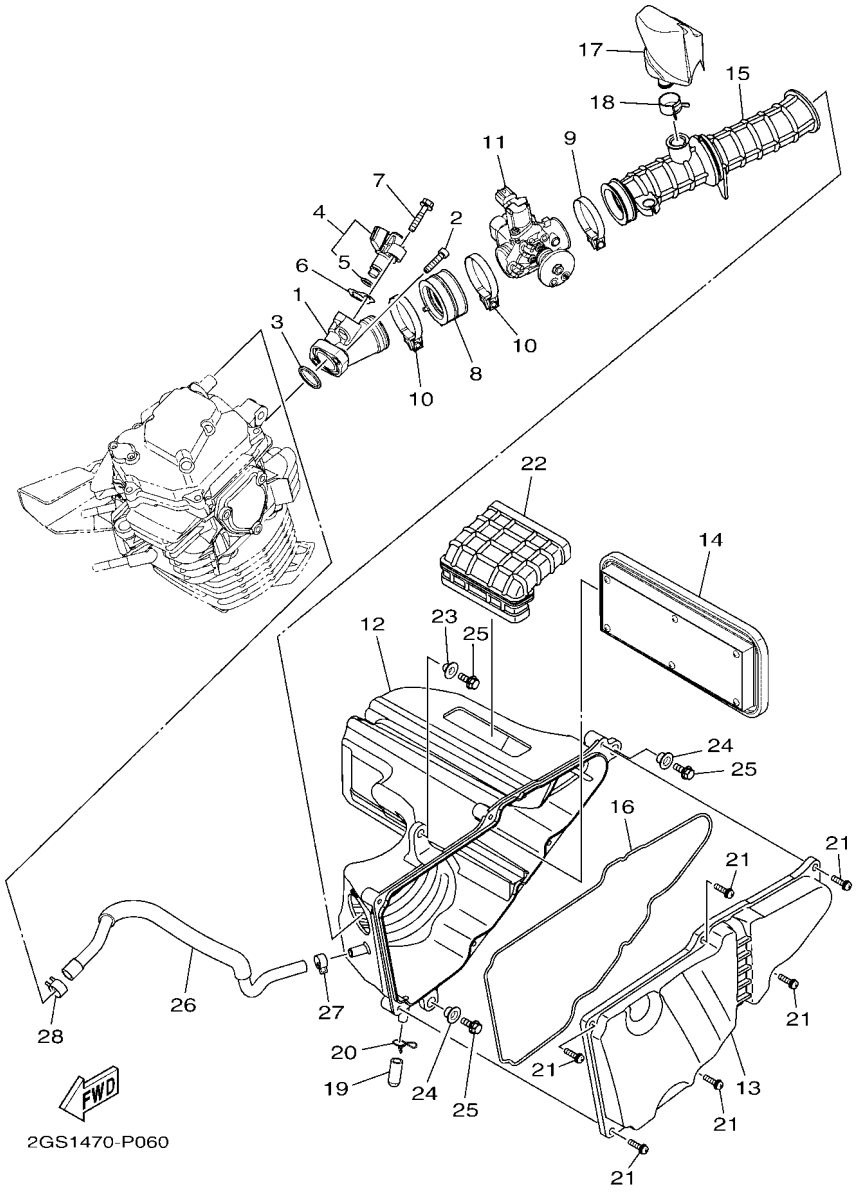

FIG. 6 ADMISION INTAKE

REF. Nº	CODIGO Nº PART NO.	DESCRIPCION DESCRIPTION	B733					OBSERVACIONES REMARKS
1	2GS–E3585–00	MULTIPLE MANIFOLD	1					
2	91312–06025	TORNILLO ALLEN BOLT, HEXAGON SOCKET HEAD	2					
3	2GS–E3645–00	EMPAQUE GASKET, MANIFOLD 1	1					
4	2GS–E3770–00	INYECTOR INJECTOR ASSY	1					
5	5CA–E4147–00	.ANILLO O .O-RING	1					
6	2GS–E3557–00	EMPAQUE GASKET	1					
7	95812–06030	TORNILLO DE REBORDE BOLT, FLANGE	1					
8	2GS–E3635–00	JUNTA DE ADMISION 1 JOINT, INTAKE 1	1					
9	90450–43807	BRIDA, MANGUERA HOSE CLAMP ASSY	1					
10	90450–48805	BRIDA, MANGUERA HOSE CLAMP ASSY	2					
11	B77–E3750–01	CAJA DE ACELERADOR COMPL. THROTTLE BODY ASSY	1					
12	2GS–E4411–00	CAJA FILTRO DEL AIRE 1 CASE, AIR CLEANER 1	1					
13	2GS–E4412–00	TAPA CAJA DEL FILTRO 1 CAP, CLEANER CASE 1	1					
14	2GS–E4450–00	ELEMENTO COMP.FILTRO DE AIRE ELEMENT ASSY, AIR CLEANER	1					
15	2GS–E4453–00	UNION DEL FILTRO DEL AIRE 1 JOINT, AIR CLEANER 1	1					
16	2GS–E4452–00	SELLO SEAL	1					
17	2GS–E4877–00	RESONATOR RESONATOR	1					
18	90467–20050	PRESILLA CLIP	1					
19	20P–E443E–00	TUBO, DRENAJE PIPE, DRAIN	1					
20	90467–12800	PRESILLA CLIP	1					
21	97602–05320	TORNILLO CON RONDONA SCREW, PAN HEAD WITH WASHER	6					
22	2GS–E4437–00	CONDUCTO DUCT	1					
23	90387–06737	ESPACIADOR COLLAR	1					
24	90387–09806	ESPACIADOR COLLAR	2					
25	95822–06016	TORNILLO DE REBORDE BOLT, FLANGE	3					
26	2GS–E1166–00	TUBO RESPIRADERO 1 PIPE, BREATHER 1	1					
27	90467–13816	PRESILLA CLIP	1					

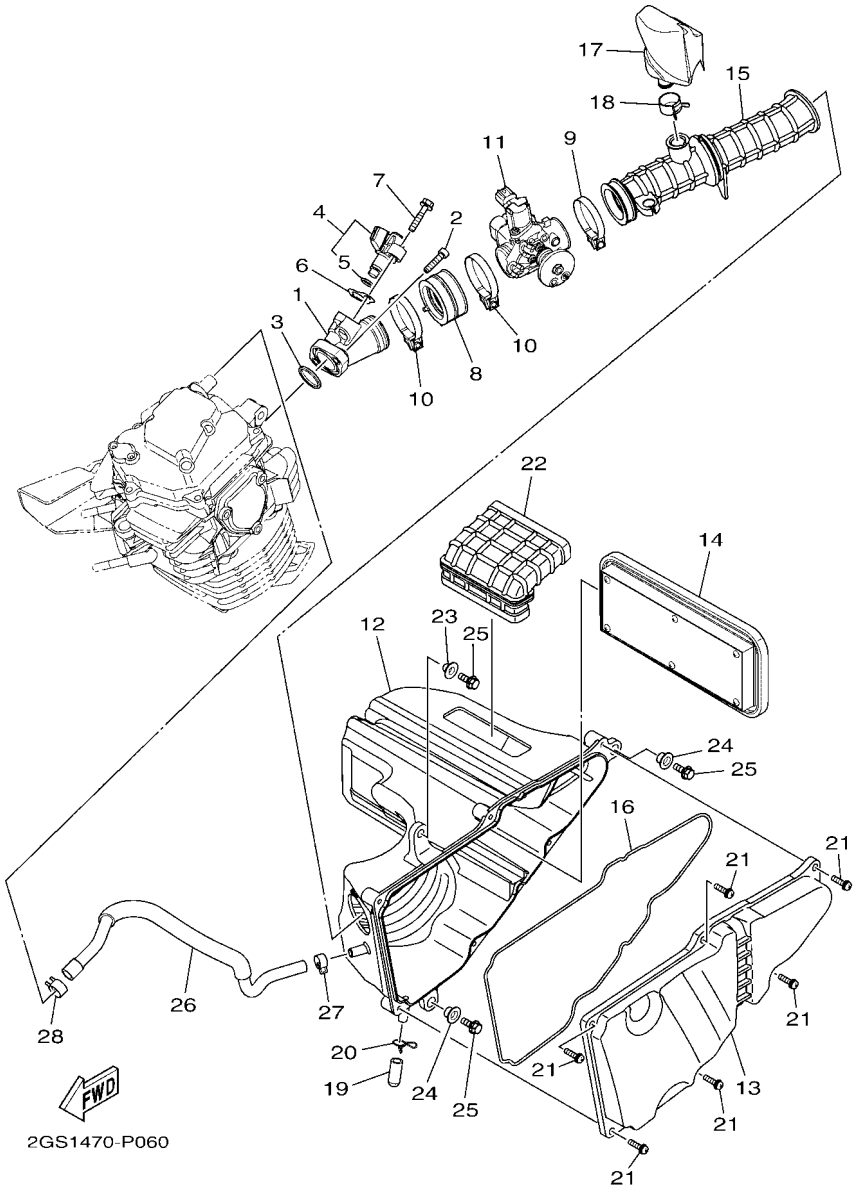

FIG. 6 ADMISION INTAKE

REF. Nº	CODIGO Nº PART NO.	DESCRIPCION DESCRIPTION	B733					OBSERVACIONES REMARKS
28	90467–15803	PRESILLA CLIP	1					

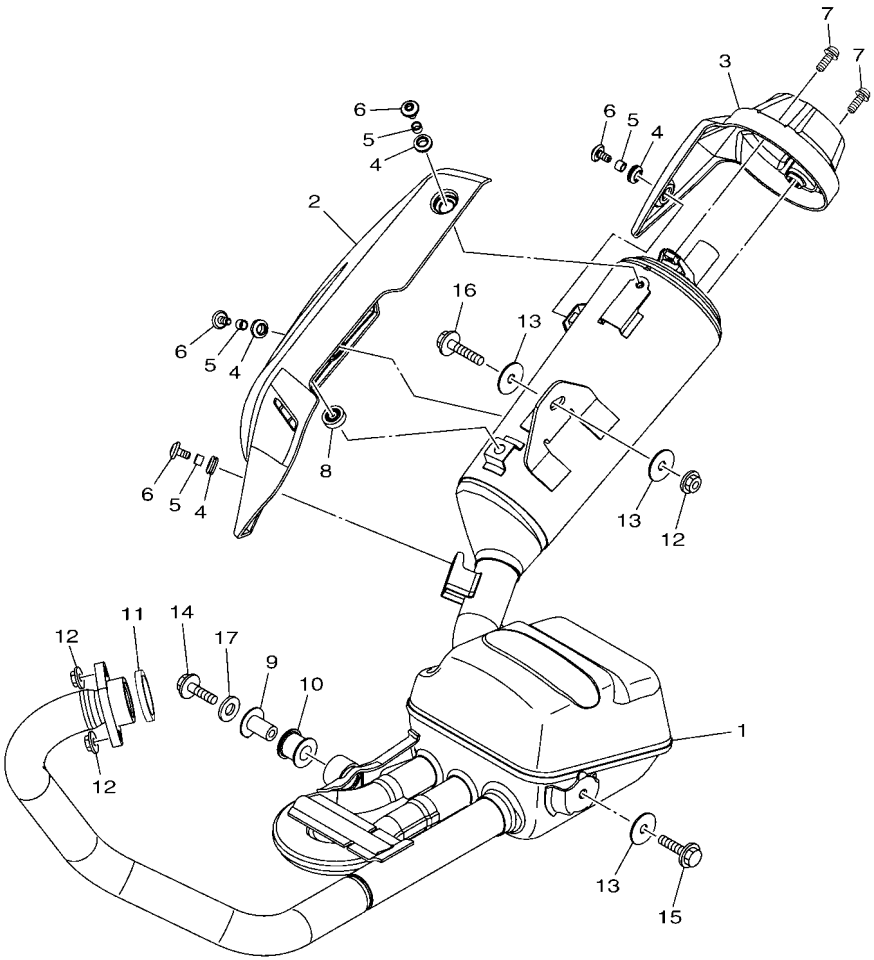

2GS1470-P070

FIG. 7 DESCARGA — EXHAUST

REF. Nº	CODIGO Nº PART NO.	DESCRIPCION DESCRIPTION	B733					OBSERVACIONES REMARKS
1	2GS–E4703–00	SILENCIADOR COMPL. 1 MUFFLER COMP. 1	1					
2	2GS–E4718–00	PROTECTOR DE SILENCIADOR 1 PROTECTOR, MUFFLER 1	1					
3	2GS–E4799–00	TAPA CAP	1					
4	90480–12812	TAPON GROMMET	4					
5	90387–06023	ESPACIADOR COLLAR	4					
6	90111–06826	TORNILLO BOLT,HEX. SOCKET BUTTON	4					
7	90111–06807	TORNILLO BOLT,HEX. SOCKET BUTTON	2					
8	54B–E4757–00	AMORTIGUADOR SILENCIADOR 2 DAMPER, MUFFLER 2	1					
9	21C–E4775–00	TUERCA NUT	1					
10	20P–E4747–00	AMORTIGUADOR DE SILENCIADOR DAMPER, MUFFLER	1					
11	21C–E4613–00	JUNTA, TUBO DE ESCAPE GASKET, EXHAUST PIPE	1					
12	95702–08500	TUERCA DE BRIDA NUT, FLANGE	3					
13	90201–08612	ARANDELA PLANA WASHER, PLATE	3					
14	95802–08025	TORNILLO DE REBORDE BOLT, FLANGE	1					
15	95802–08035	TORNILLO DE REBORDE BOLT, FLANGE	1					
16	95812–08040	TORNILLO DE REBORDE BOLT, FLANGE	1					
17	90201–087F0	ARANDELA PLANA WASHER, PLATE	1					

FIG. 8 CARTER — CRANKCASE

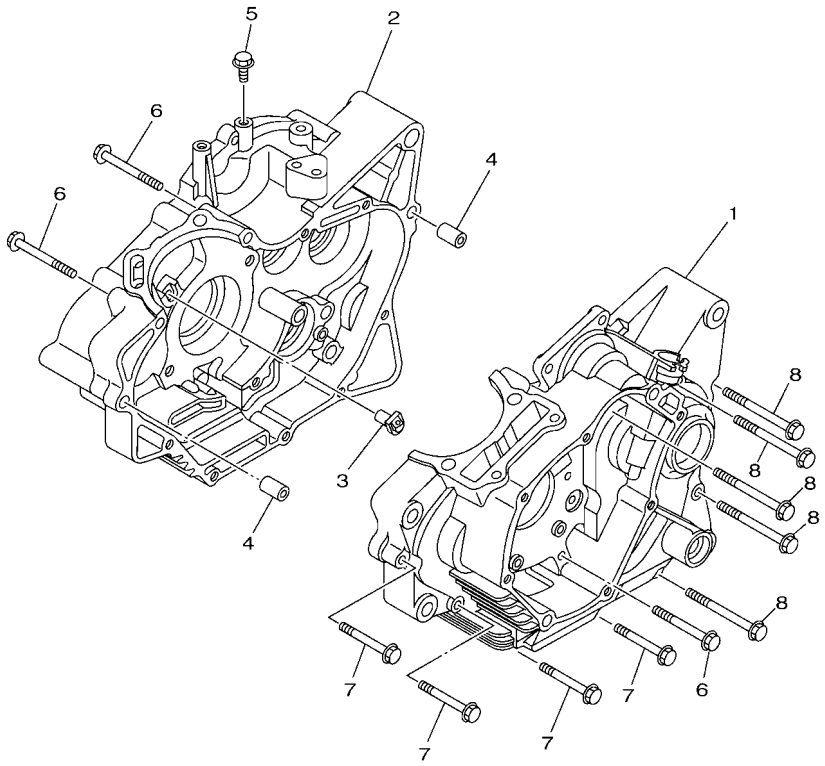

21CG470-M090

REF. Nº	CODIGO Nº PART NO.	DESCRIPCION DESCRIPTION	B733					OBSERVACIONES REMARKS
1	54B–E5111–00	CARTER MANIVELA 1 CRANKCASE 1	1					
2	54B–E5121–01	CARTER MANIVELA 2 CRANKCASE 2	1					
3	21C–E5155–00	BOQUILLA 3 NOZZLE 3	1					
4	91830–21014	PASADOR DE CLAVIJA PIN, DOWEL	2					
5	95802–06010	TORNILLO DE REBORDE BOLT, FLANGE	1					
6	95022–06055	PERNO, DE BRIDA BOLT, FLANGE	3					
7	95022–06045	PERNO, DE BRIDA BOLT, FLANGE	4					
8	95022–06070	PERNO, DE BRIDA BOLT, FLANGE	5					

FIG. 9 CUBIERTA DE CARTER 1 — CRANKCASE COVER 1

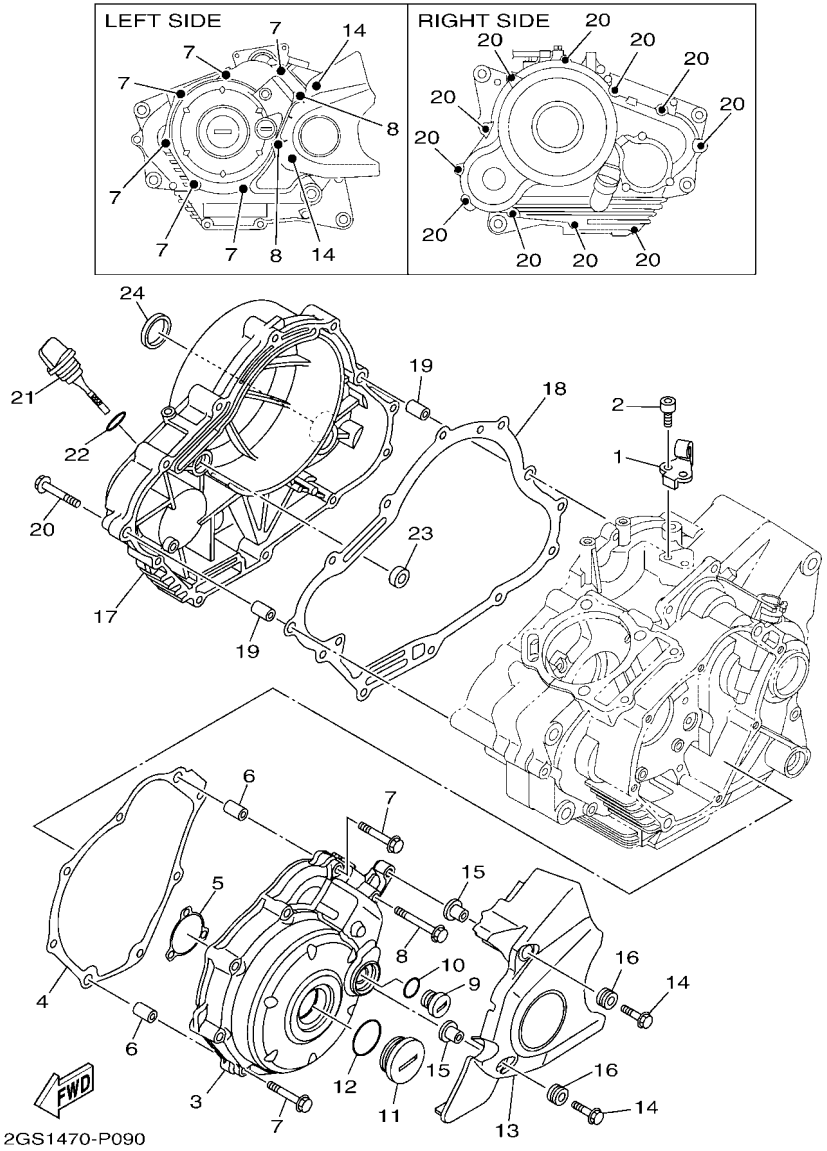

REF. Nº	CODIGO Nº PART NO.	DESCRIPCION DESCRIPTION	B733					OBSERVACIONES REMARKS
1	21C–E5441–00	SOSTEN DE CABLE DE EMBRAGUE HOLDER, CLUTCH CABLE	1					
2	91312–06014	TORNILLO BOLT	2					
3	2GS–E5411–00	CUBIERTA DE CARTER 1 COVER, CRANKCASE 1	1					
4	21C–E5451–10	EMPAQ DE CUBIERTA DE CARTER GASKET, CRANKCASE COVER 1	1					
5	45P–E5353–00	JUNTA DE DRENAJE GASKET, DRAIN	1					
6	91830–21014	PASADOR DE CLAVIJA PIN, DOWEL	2					
7	95022–06040	PERNO, DE BRIDA BOLT, FLANGE	6					
8	95022–06050	PERNO, DE BRIDA BOLT, FLANGE	2					
9	90340–14117	TORNILLO, DE DRENAJE PLUG, STRAIGHT SCREW	1					
10	93210–14899	ANILLO O O-RING	1					
11	90340–32805	TORNILLO, DE DRENAJE PLUG, STRAIGHT SCREW	1					
12	93210–32814	ANILLO O O-RING	1					
13	2GS–E5418–00	CUBIERTA CAJA DE CADENA COVER, CHAIN CASE	1					
14	95802–06020	TORNILLO DE REBORDE BOLT, FLANGE	2					
15	90387–068C9	ESPACIADOR COLLAR	2					
16	90480–12812	TAPON GROMMET	2					
17	21C–E5421–00	TAPA DE CARTER DERECHA COVER, CRANKCASE 2	1					
18	21C–E5461–10	JUNTA TAPA CARTER DERECHO 2 GASKET, CRANKCASE COVER 2	1					
19	91830–21014	PASADOR DE CLAVIJA PIN, DOWEL	2					
20	95022–06040	PERNO, DE BRIDA BOLT, FLANGE	11					
21	54B–E5362–00	TAPON DEL NIVEL DE ACEITE PLUG, OIL LEVEL	1					
22	93210–19809	ANILLO O O-RING	1					
23	93101–10838	SELLO ACEITE OIL SEAL	1					
24	90338–30802	TAPON PLUG	1					

FIG. 10 EMBRAGUE DEL ARRANQUE — STARTER CLUTCH

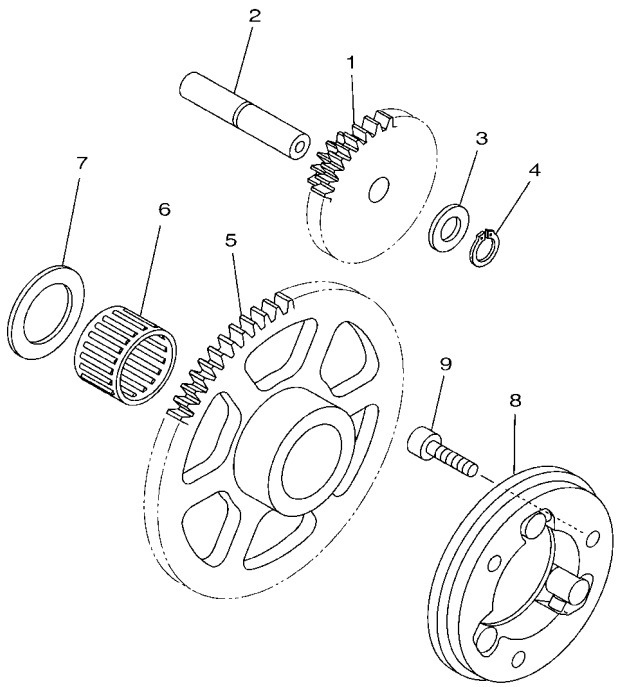

1PS1473-K120

REF. Nº	CODIGO Nº PART NO.	DESCRIPCION DESCRIPTION	B733					OBSERVACIONES REMARKS
1	1PM–E5514–00	ENGRANAJE 2 GEAR 2	1					
2	21C–E5521–00	EJE 1 SHAFT 1	1					
3	90201–105E8	ARANDELA PLANA WASHER, PLATE	1					
4	99009–10400	PRESILLA REDONDA CIRCLIP	1					
5	1PM–E5524–10	RUEDA DE ARRANQUE WHEEL, STARTER	1					
6	93310–325X3	COJINETE DE RODILLOS BEARING	1					
7	90201–25290	ARANDELA PLANA WASHER, PLATE	1					
8	2GS–E5580–00	ENSAMBLE EXT.EMBRAGUE ARRANQUE STARTER CLUTCH OUTER ASSY	1					
9	91312–06020	TORNILLO BOLT	3					

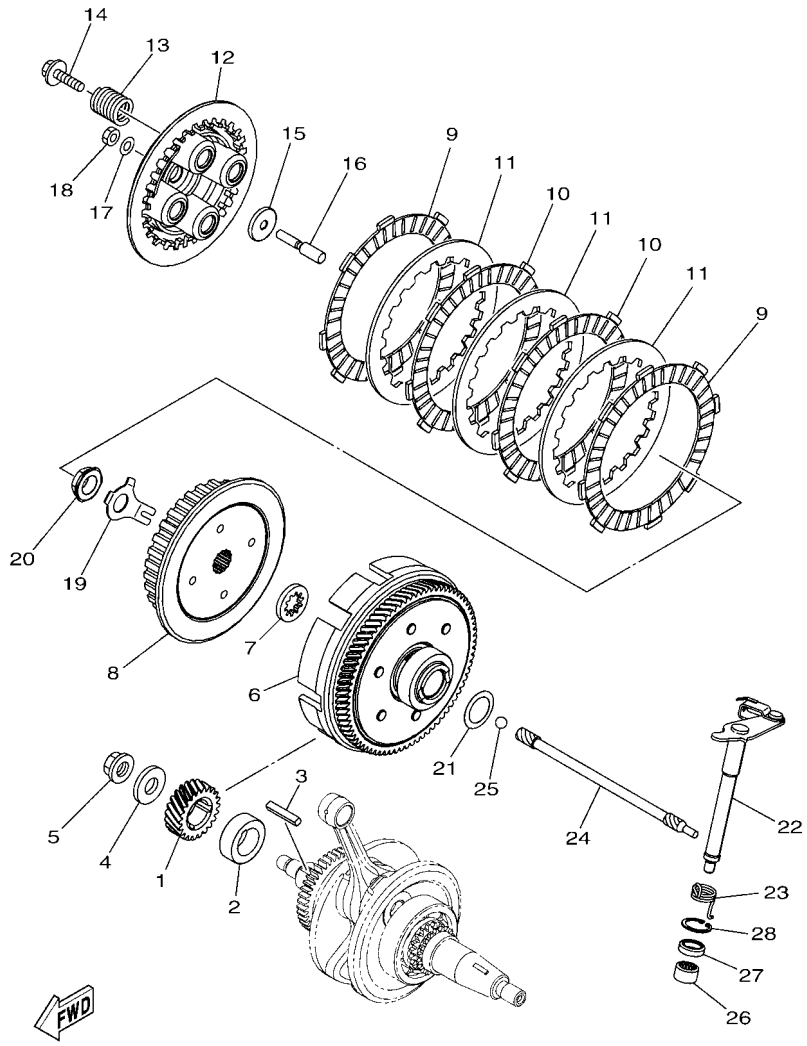

FIG. 11 EMBRAGUE — CLUTCH

REF. Nº	CODIGO Nº PART NO.	DESCRIPCION DESCRIPTION	B733					OBSERVACIONES REMARKS
1	54B–E6111–10	ENGRANAJE TRACC.PRIMARIA GEAR, PRIMARY DRIVE	1					
2	54B–E7258–00	COLLAR 1 COLLAR 1	1					
3	21C–E6193–00	CHAVETA DE AGUJA KEY, FEATHER	1					
4	90201–12019	ARANDELA PLANA WASHER, PLATE	1					
5	90179–12802	TUERCA NUT	1					
6	2GS–E6150–00	CAMPANA DE EMBRAGUE PRIMARY DRIVEN GEAR COMP.	1					
7	21C–E6154–00	ARANDELA, DE EMPUJE 1 PLATE, THRUST 1	1					
8	21C–E6371–00	CUBO, DE EMBRAGUE BOSS, CLUTCH	1					
9	54B–E6321–00	PLACA DE FRICCION PLATE, FRICTION	2					
10	21C–E6331–00	DISCO, DE FRICCION 2 PLATE, FRICTION 2	2					
11	21C–E6324–00	PLACA DE EMBRAGUE PLATE, CLUTCH 1	3					
12	54B–E6351–00	PLATO DE PRESION PLATE, PRESSURE 1	1					
13	21C–E6333–00	RESORTE DE EMBRAGUE 1 SPRING, CLUTCH 1	4					
14	21C–E6337–00	TORNILLO DE RESORTE SCREW, SPRING	4					
15	21C–E6358–00	PLACA DE EMPUJE PLATE, PUSH	1					
16	21C–E6356–01	VARILLA DE EMPUJE 1 ROD, PUSH 1	1					
17	54B–E6144–00	ARANDELA WASHER	1					
18	3C1–E6344–00	TUERCA DE AJUSTE NUT, ADJUSTING	1					
19	21C–E6135–10	ARANDELA DE CIERRE WASHER, LOCK	1					
20	90179–14001	TUERCA NUT	1					
21	90208–20003	ARANDELA DE RESORTE CONICO WASHER, CONICAL SPRING	1					
22	21C–E6380–02	LEVA DE EMPUJE COMPLETA PUSH LEVER ASSY	1					
23	1PM–E6345–00	RESORTE DE RETORNO SPRING, RETURN	1					
24	54B–E6357–00	VARILLA DE EMPUJE 2 ROD, PUSH 2	1					
25	93505–16844	BOLA BALL	1					
26	93315–112Y9	COJINETE DE RODILLOS BEARING	1					
27	93102–12877	SELLO ACEITE OIL SEAL	1					

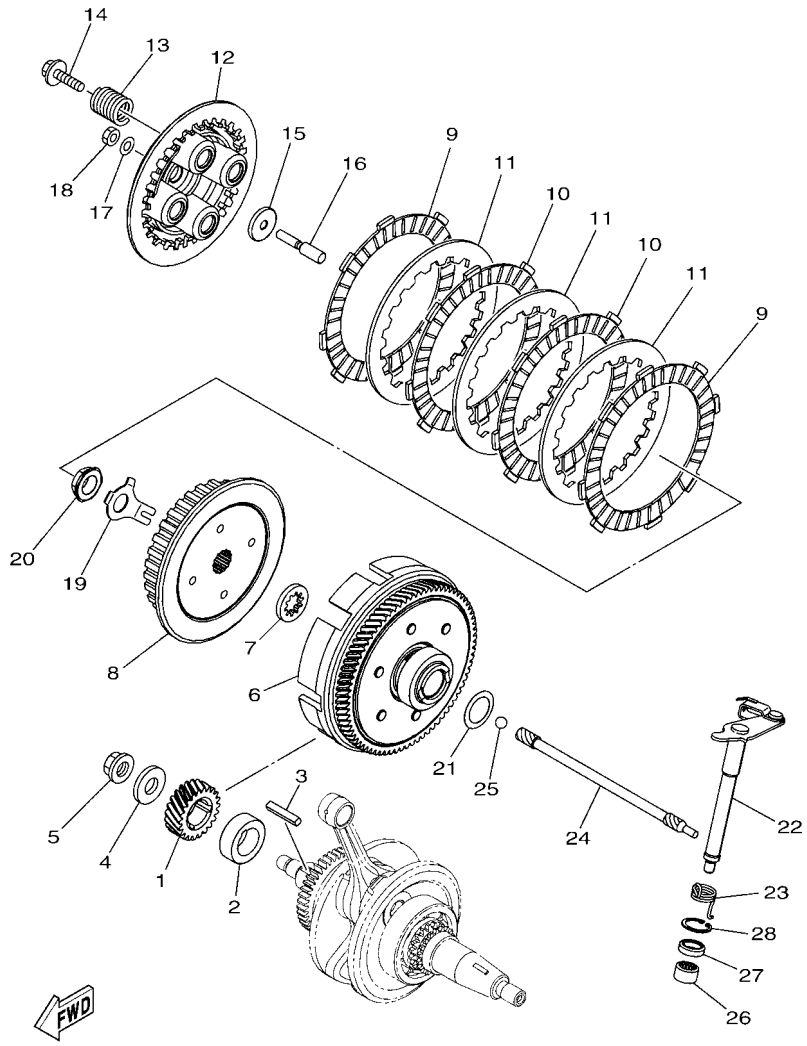

FIG. 11 EMBRAGUE — CLUTCH

REF. Nº	CODIGO Nº PART NO.	DESCRIPCION DESCRIPTION	B733					OBSERVACIONES REMARKS
28	99009–20500	PRESILLA REDONDA CIRCLIP	1					

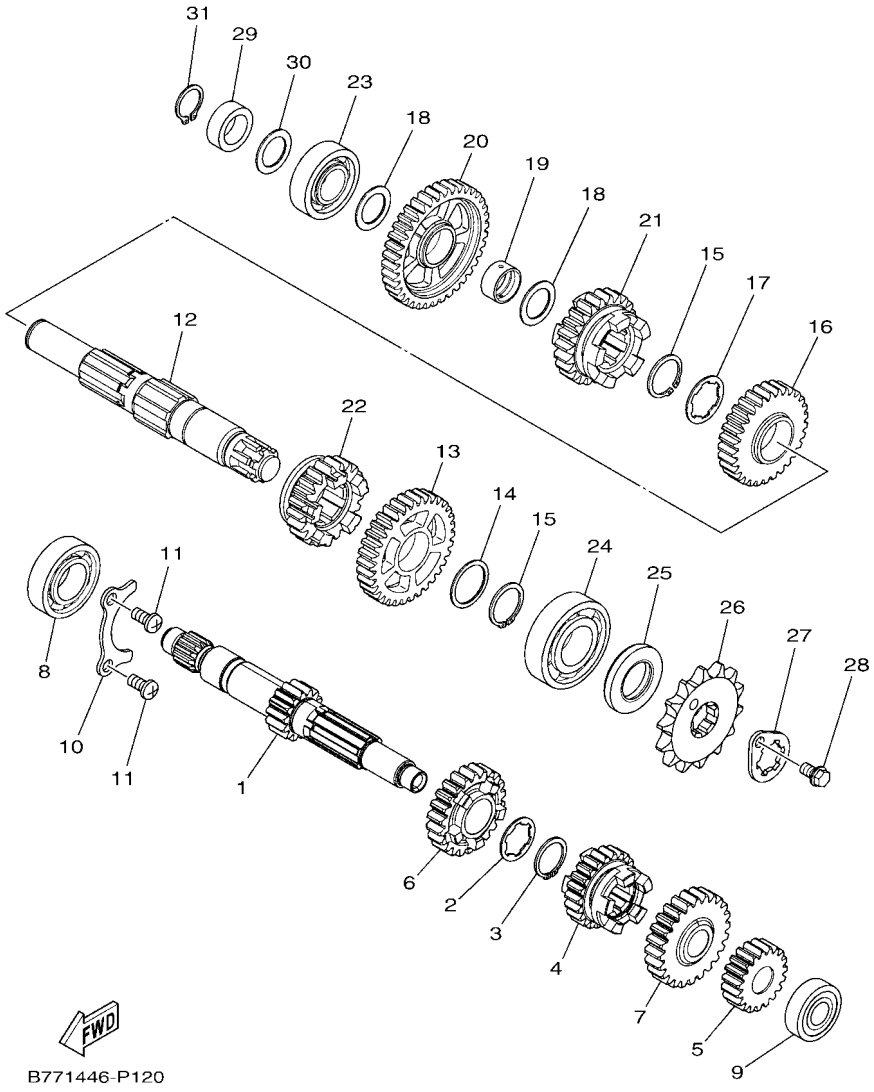

FIG. 12 TRANSMISION — TRANSMISSION

REF. Nº	CODIGO Nº PART NO.	DESCRIPCION DESCRIPTION	B733					OBSERVACIONES REMARKS
1	21C–E7411–50	EJE PRIMARIO AXLE, MAIN	1					
2	90209–17285	ARANDELA DE SEPARACION WASHER	1					
3	93410–20809	SEGURO CIRCLIP	1					
4	B77–E7131–00	ENGRANAJE PINON DE 3RA (22T) GEAR, 3RD PINION (22T)	1					
5	21C–E7121–10	ENGRANAJE PINON DE 2DA (19T) GEAR, 2ND PINION (19T)	1					
6	B77–E7141–00	ENGRANAJE PINON DE 4TA (22T) GEAR, 4TH PINION (22T)	1					
7	B77–E7151–00	ENGRANAJE PINON DE 5TA (24T) GEAR, 5TH PINION (24T)	1					
8	93306–054YE	COJINETE BEARING	1					UR UR
	93306–054Y6	COJINETE BEARING	1					UR UR
9	93306–201Y4	COJINETE BEARING	1					
10	21C–E7471–00	PLACA, DE CUBIERTA PLATE, COVER	1					
11	98502–06012	TORNILLO SCREW, PAN HEAD	2					
12	21C–E7402–50	EJE DE TRACCION COMPLETO DRIVE AXLE ASSY	1					
13	21C–E7221–21	ENGRANAJE RUEDA DE 2DA (34T) GEAR, 2ND WHEEL (34T)	1					
14	90201–22793	ARANDELA PLANA WASHER, PLATE	1					
15	93410–22039	SEGURO CIRCLIP	2					
16	21C–E7231–31	ENGRANAJE RUEDA DE 3RA (29T) GEAR, 3RD WHEEL (29T)	1					
17	90209–18208	ARANDELA DE SEPARACION WASHER	1					
18	90201–178D3	ARANDELA PLANA WASHER, PLATE	2					
19	21C–E7258–00	COLLAR 1 COLLAR 1	1					
20	21C–E7211–20	ENGRANAJE RUEDA DE 1 RA (38T) GEAR, 1ST WHEEL (38T)	1					
21	B77–E7241–00	ENGRANAJE DE RUEDA 4TA (23T) GEAR, 4TH WHEEL (23T)	1					
22	B77–E7251–00	ENGRANAJE RUEDA DE 5TA (21T) GEAR, 5TH WHEEL (21T)	1					
23	93306–203XR	COJINETE BEARING	1					
24	93306–272X4	COJINETE BEARING	1					UR UR
	93306–272X1	COJINETE BEARING	1					UR UR
25	93102–22818	SELLO ACEITE OIL SEAL	1					

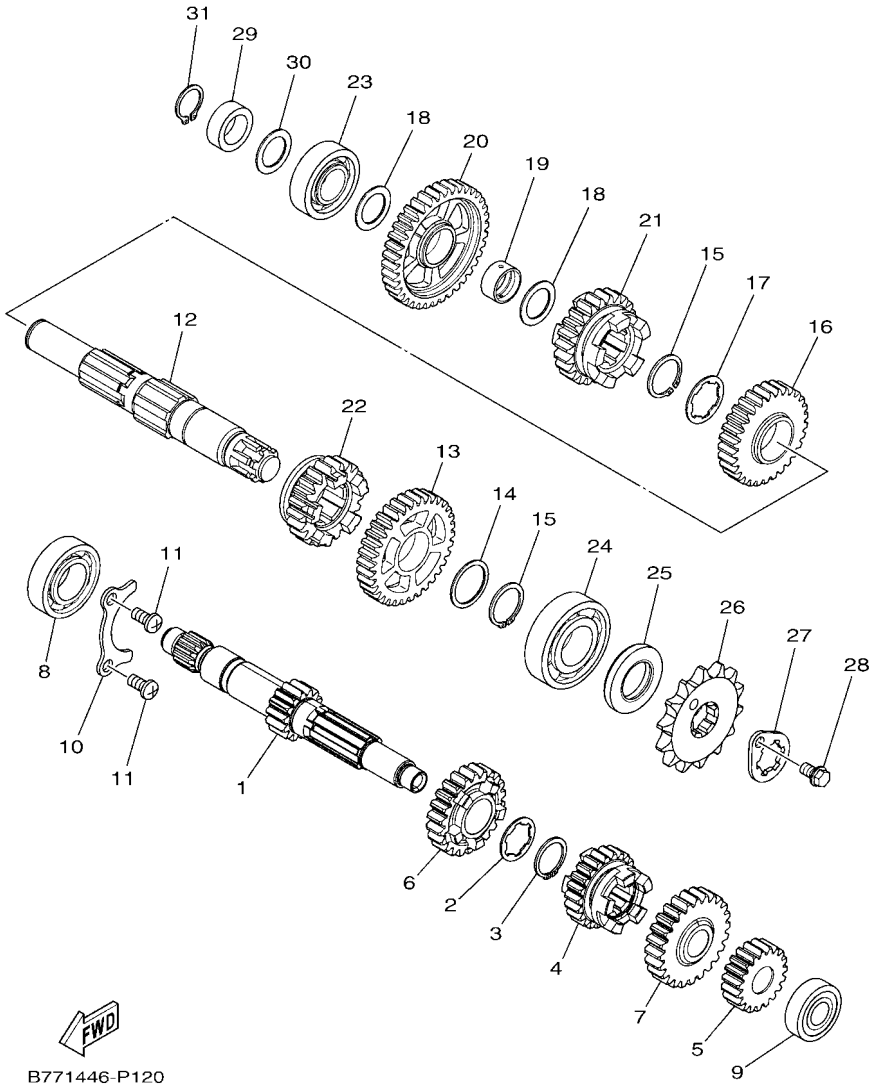

FIG. 12 TRANSMISION TRANSMISSION

REF. Nº	CODIGO Nº PART NO.	DESCRIPCION DESCRIPTION	B733					OBSERVACIONES REMARKS
26	93822–14800	CORONA (14T) SPROCKET, DRIVE (14T)	1					
27	4LS–E7456–00	SOPORTE DE CORONA HOLDER, SPROCKET	1					
28	95022–06010	PERNO, DE BRIDA BOLT, FLANGE	1					
29	21C–E5666–00	SEPARADOR SPACER	1					
30	90201–178D3	ARANDELA PLANA WASHER, PLATE	1					
31	99009–17400	PRESILLA REDONDA CIRCLIP	1					

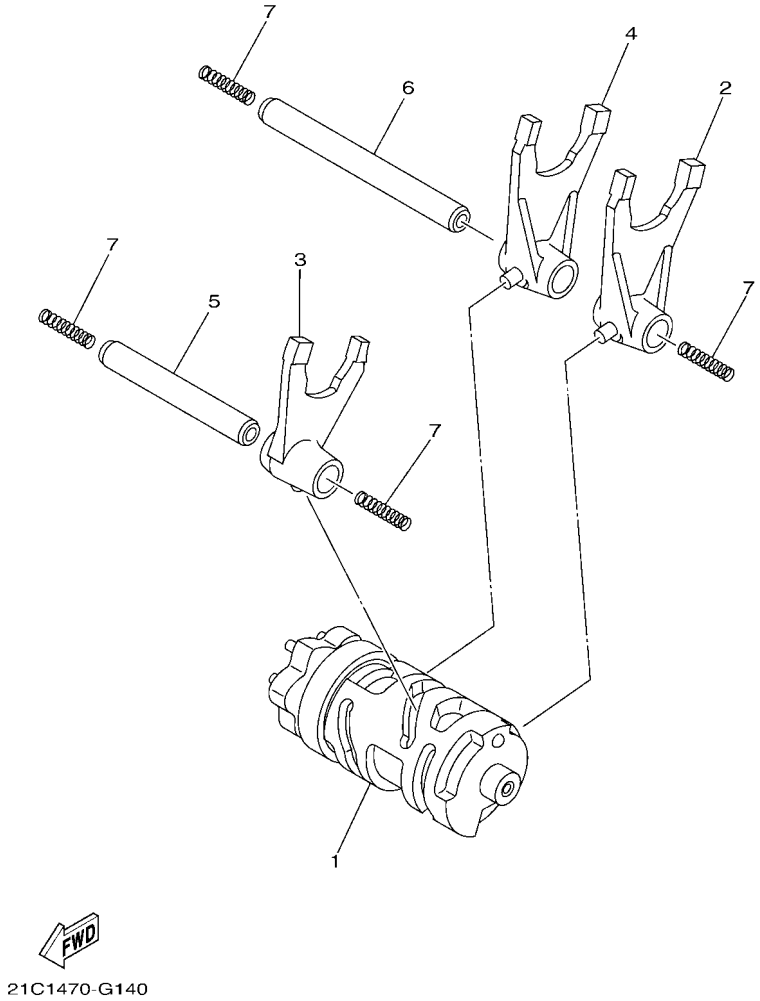

FIG. 13 LEVA DE CAMBIO & HORQUILLA — SHIFT CAM & FORK

REF. Nº	CODIGO Nº PART NO.	DESCRIPCION DESCRIPTION	B733					OBSERVACIONES REMARKS
1	2GS–E8540–00	LEVA DEL CAMBIO COMPLETA SHIFT CAM ASSY	1					
2	21C–E8511–00	HORQUILLA DEL CAMBIO 1 FORK, SHIFT 1	1					
3	21C–E8512–00	HORQUILLA DEL CAMBIO 2 FORK, SHIFT 2	1					
4	21C–E8513–00	HORQUILLA DEL CAMBIO 3 FORK, SHIFT 3	1					
5	21C–E8531–00	BARRA GUIA HORQ. CAMBIO 1 BAR, SHIFT FORK GUIDE 1	1					
6	21C–E8535–00	BARRA GUIA HORQ .CAMBIO 2 BAR, SHIFT FORK GUIDE 2	1					
7	90501–06800	RESORTE DE COMPRESION SPRING, COMPRESSION	4					

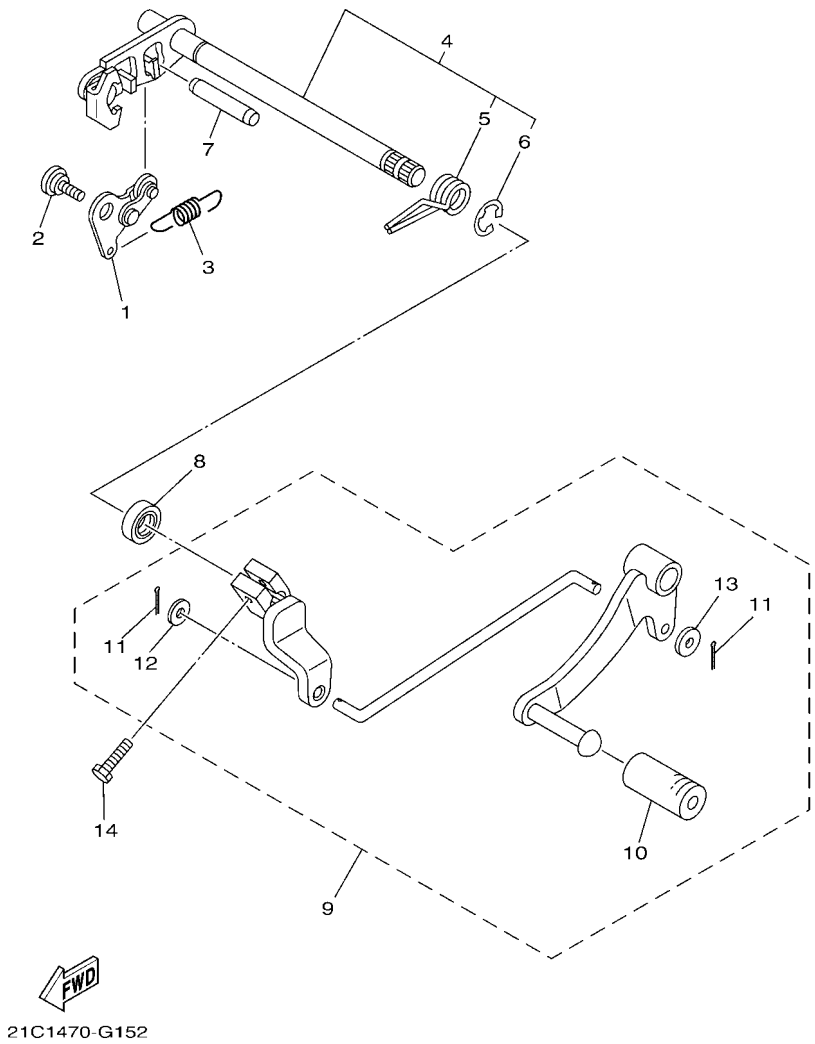

FIG. 14 EJE DE CAMBIO & PEDAL — SHIFT SHAFT

REF. Nº	CODIGO Nº PART NO.	DESCRIPCION DESCRIPTION	B733					OBSERVACIONES REMARKS
1	21C–E8140–00	PALANCA DE TOPE COMPLETA STOPPER LEVER ASSY	1					
2	90109–06259	PERNO BOLT	1					
3	21C–E8337–00	RESORTE SPRING	1					
4	21C–E8101–01	EJE SELECTOR COMPLETO SHIFT SHAFT ASSY	1					
5	90508–32805	.RESORTE DE TORSION .SPRING, TORSION	1					
6	99001–10600	.PRESILLA REDONDA .CIRCLIP	1					
7	93608–43238	PASADOR DE CLAVIJA PIN, DOWEL	1					
8	93102–12875	SELLO ACEITE OIL SEAL	1					
9	45D–E8110–00	PEDAL DE CAMBIO COMPLETO SHIFT PEDAL ASSY	1					
10	5VA–E8113–00	.FUNDA DEL PEDAL DEL CAMBIO .COVER, SHIFT PEDAL	1					
11	91401–20012	.CHAVETA .PIN, COTTER	2					
12	92907–06200	.ARANDELA .WASHER	1					
13	90201–06871	.ARANDELA PLANA .WASHER, PLATE	1					
14	97012–06020	PERNO BOLT	1					

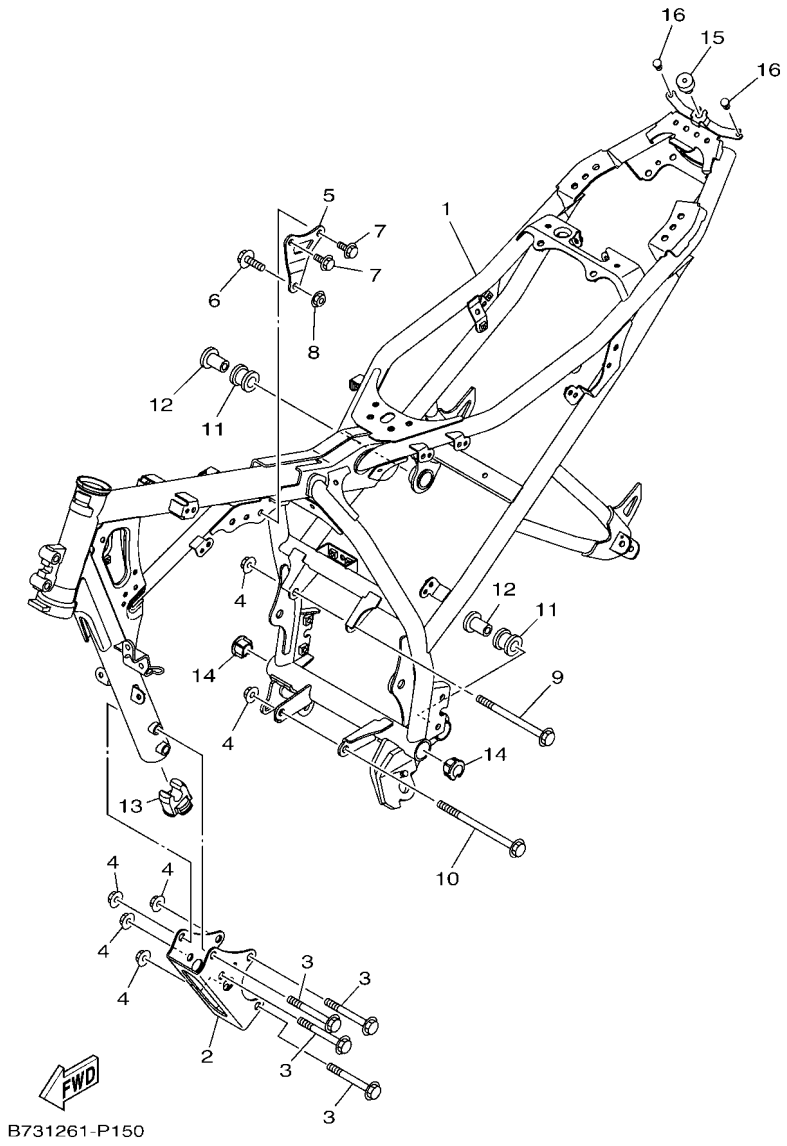

FIG. 15 CUADRO — FRAME

REF. Nº	CODIGO Nº PART NO.	DESCRIPCION DESCRIPTION	B733					OBSERVACIONES REMARKS
1	B73–F1110–00	ARMAZON COMPLETO FRAME COMP.	1					
2	B72–F1316–00	SOPORTE DE MOTOR 2 STAY, ENGINE 2	1					
3	95812–10080	TORNILLO DE REBORDE BOLT, FLANGE	4					
4	90179–10811	TUERCA NUT	6					
5	2GS–F1317–00	SOPORTE DE MOTOR 3 STAY, ENGINE 3	1					
6	90105–08002	TORNILLO BOLT, FLANGE	1					
7	95812–08016	TORNILLO DE REBORDE BOLT, FLANGE	2					
8	90179–08674	TUERCA NUT	1					
9	95817–10130	TORNILLO BOLT, FLANGE	1					
10	90105–10861	TORNILLO BOLT, FLANGE	1					
11	20P–E4747–00	AMORTIGUADOR DE SILENCIADOR DAMPER, MUFFLER	2					
12	90387–08822	ESPACIADOR COLLAR	2					
13	21C–F1638–02	AMORTIGUADOR 1 DAMPER 1	1					
14	2GS–F1279–00	TAPON CIEGO PLUG, BLIND	2					
15	1PM–F4741–00	COJIN DE ASIENTO PAD, SEAT	1					
16	21C–F1717–00	AMORTIGUADOR DAMPER	2					

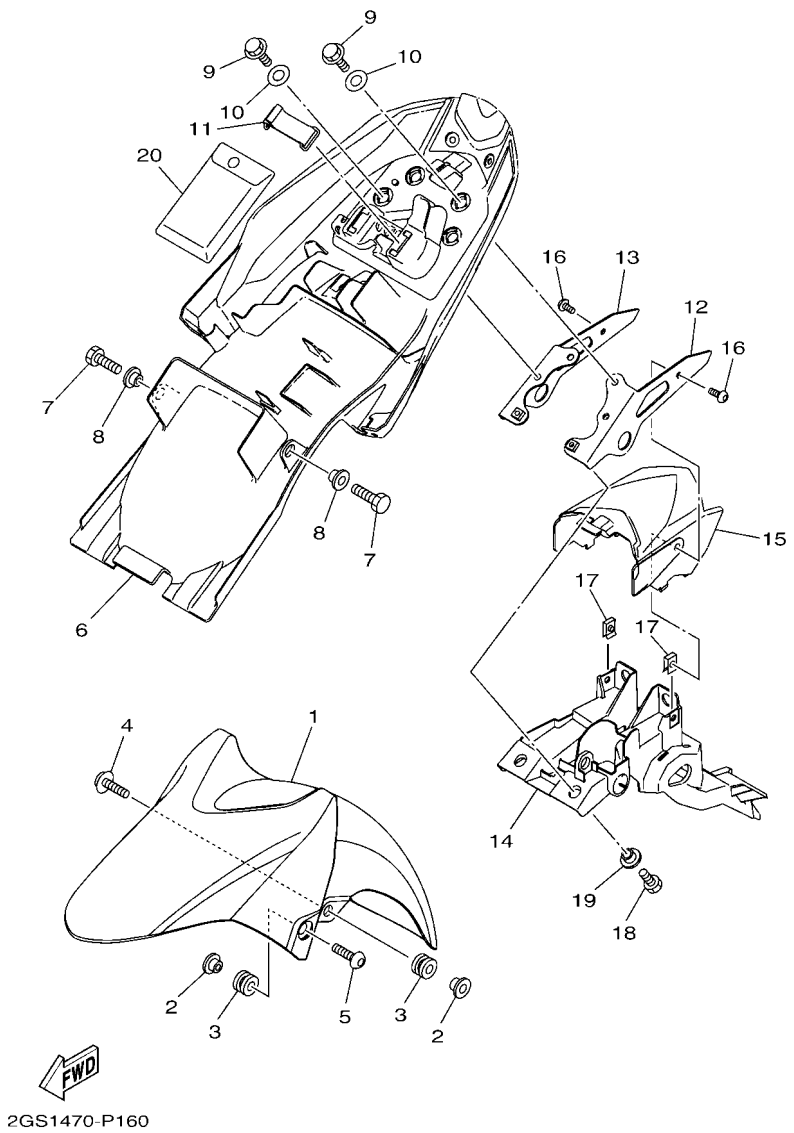

FIG. 16 GUARDABARRO FENDER

REF. Nº	CODIGO Nº PART NO.	DESCRIPCION DESCRIPTION	B733					OBSERVACIONES REMARKS
1	45D–F1511–10–P2	GUARDABARRO DELANTERO FENDER, FRONT	1					VRC1 PARA YB VRC1 FOR YB
	45D–F1511–10–P3	GUARDABARRO DELANTERO FENDER, FRONT	1					S3 PARA VRC1 S3 FOR VRC1
	45D–F1511–10–P4	GUARDABARRO DELANTERO FENDER, FRONT	1					DPBML PARA BWC1 DPBML FOR BWC1
2	90387–068C5	ESPACIADOR COLLAR	4					
3	90480–08801	TAPON GROMMET	4					
4	95802–06020	TORNILLO DE REBORDE BOLT, FLANGE	2					
5	90111–06117	TORNILLO BOLT,HEX. SOCKET BUTTON	2					
6	2GS–F1611–00	GUARDABARRO TRASERO FENDER, REAR	1					
7	97012–06014	PERNO BOLT	2					
8	90387–06048	ESPACIADOR COLLAR	2					
9	95822–06016	TORNILLO DE REBORDE BOLT, FLANGE	4					
10	90387–08079	ESPACIADOR COLLAR	4					
11	4UU–F811G–00	CINTA BAND	1					
12	2GS–F1613–00	SOPORTE DE GUARDABARRO STAY, FENDER 1	1					
13	2GS–F1614–00	SOPORTE DE GUARDABARRO 2 STAY, FENDER 2	1					
14	2GS–F1651–00	TAPA DE GUARDABARRO TRAS. COVER, REAR FENDER	1					
15	2GS–F163A–00	CUBIERTA TRAS GUARDABARRO 1 COVER, REAR FENDER 1	1					
16	90149–06829	TORNILLO DE REGLAJE SCREW	2					
17	90183–06800	TUERCA DE RESORTE NUT, SPRING	2					
18	97012–06014	PERNO BOLT	2					
19	90387–06048	ESPACIADOR COLLAR	2					
20	21C–F8100–20	JUEGO DE HERRAMIENTAS TOOL KIT	1					

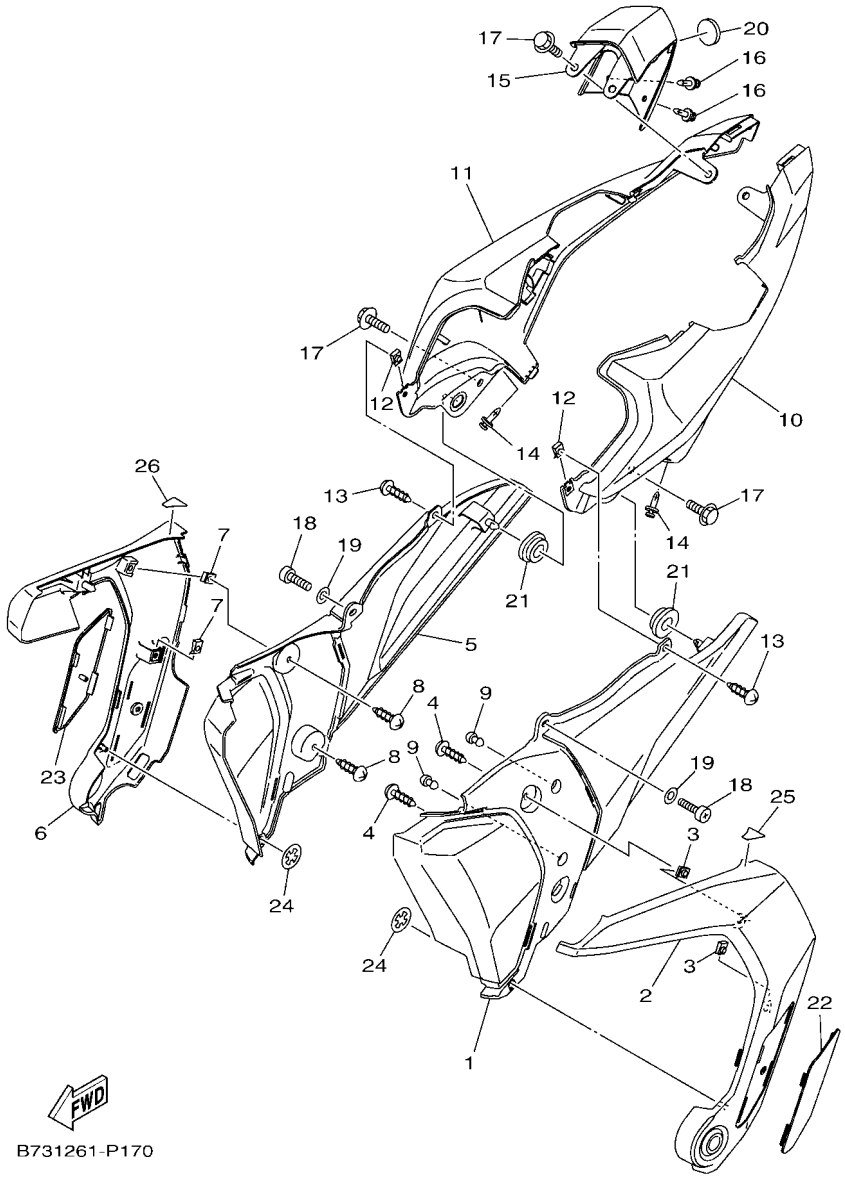

FIG. 17 CUBIERTA LATERAL — SIDE COVER

REF. Nº	CODIGO Nº PART NO.	DESCRIPCION DESCRIPTION	B733					OBSERVACIONES REMARKS
1	B72–F1711–10	CUBIERTA LATERAL 1 COVER, SIDE 1	1					
2	B72–F172A–10–P0	PANEL 1 PANEL 1	1					S8 S8
3	90183–05807	TUERCA DE RESORTE NUT, SPRING	2					
4	97702–50012	TORNILLO ROSCA HEMBRA SCREW, TAPPING	2					
5	B72–F1721–10	CUBIERTA LATERAL 2 COVER, SIDE 2	1					
6	B72–F172F–10–P0	PANEL 2 PANEL 2	1					S8 S8
7	90183–05807	TUERCA DE RESORTE NUT, SPRING	2					
8	97702–50012	TORNILLO ROSCA HEMBRA SCREW, TAPPING	2					
9	21C–F1717–00	AMORTIGUADOR DAMPER	2					
10	B72–F1731–00–33	TAPA LATERAL 3 COVER, SIDE 3	1					UR PARA YB UR FOR YB
	B72–F1731–00–P0	TAPA LATERAL 3 COVER, SIDE 3	1					UR PARA VRC1 UR FOR VRC1
	B72–F1731–00–P3	TAPA LATERAL 3 COVER, SIDE 3	1					UR PARA BWC1 UR FOR BWC1
11	B72–F1741–00–33	TAPA LATERAL 4 COVER, SIDE 4	1					UR PARA YB UR FOR YB
	B72–F1741–00–P0	TAPA LATERAL 4 COVER, SIDE 4	1					UR PARA VRC1 UR FOR VRC1
	B72–F1741–00–P3	TAPA LATERAL 4 COVER, SIDE 4	1					UR PARA BWC1 UR FOR BWC1
12	90183–05807	TUERCA DE RESORTE NUT, SPRING	2					
13	97702–50012	TORNILLO ROSCA HEMBRA SCREW, TAPPING	2					
14	90269–06814	REMACHE RIVET	2					
15	B72–F171E–00–P0	CUBIERTA LATERAL 5 COVER, SIDE 5	1					VRC1 PARA YB VRC1 FOR YB
	B72–F171E–00–P3	CUBIERTA LATERAL 5 COVER, SIDE 5	1					S3 PARA VRC1 S3 FOR VRC1
	B72–F171E–00–P4	CUBIERTA LATERAL 5 COVER, SIDE 5	1					DPBML PARA BWC1 DPBML FOR BWC1
16	90269–06814	REMACHE RIVET	2					
17	90119–06137	TORNILLO CON ARANDELA BOLT, WITH WASHER	4					
18	98502–06014	TORNILLO SCREW, PAN HEAD	2					
19	90201–06055	ARANDELA PLANA WASHER, PLATE	2					
20	22P–F836B–00	MARCA TUNING FORK MARK	1					
21	90480–01558	TAPON GROMMET	2					

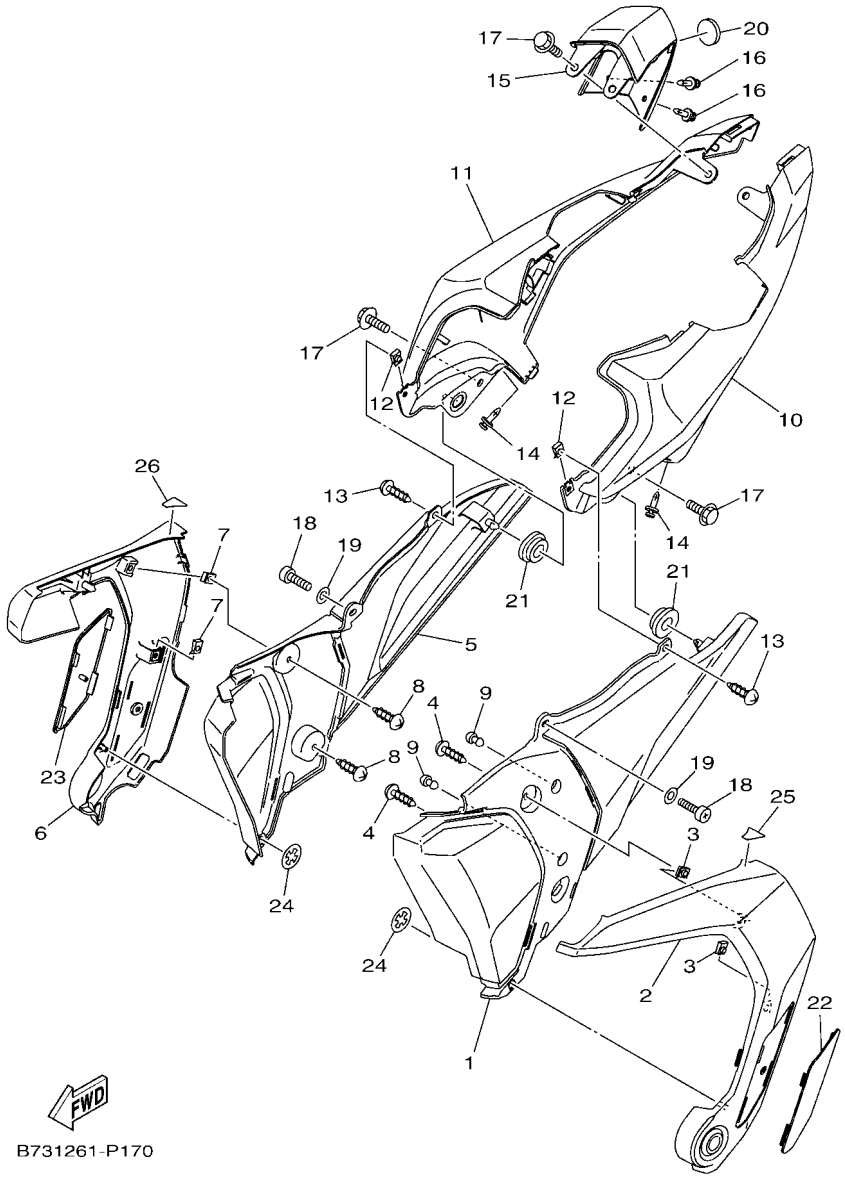

FIG. 17 CUBIERTA LATERAL — SIDE COVER

REF. Nº	CODIGO Nº PART NO.	DESCRIPCION DESCRIPTION	B733					OBSERVACIONES REMARKS
22	2GS–F171L–00	MUELLE , CUBIERTA LATERAL 1 MOLE, SIDE COVER 1	1					
23	2GS–F171M–00	MUELLE, CUBIERTA LATERAL 2 MOLE, SIDE COVER 2	1					
24	90183–05067	TUERCA DE RESORTE NUT, SPRING	2					
25	2GS–F1732–00	SELLO 1 SEAL 1	1					
26	2GS–F1735–00	SELLO 2 SEAL 2	1					

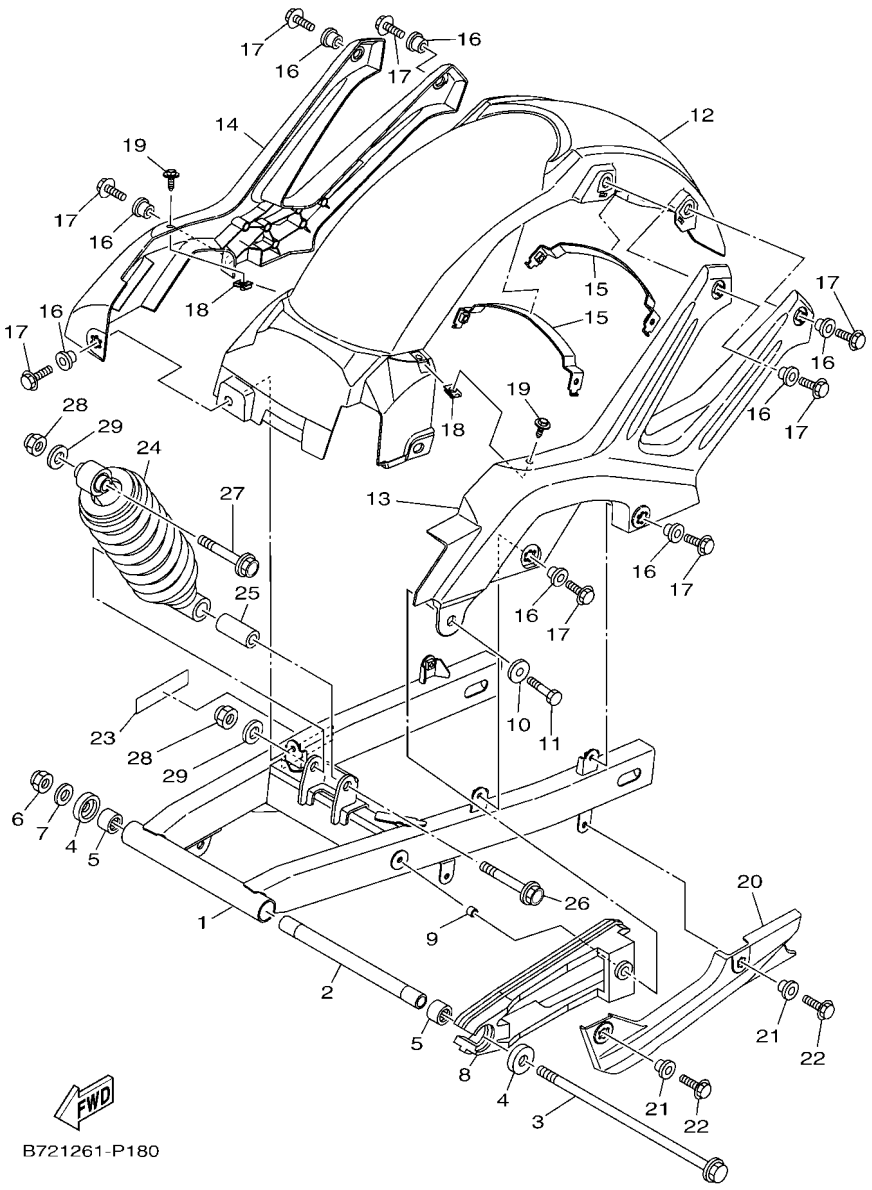

FIG. 18 BRAZO TRASERO & SUSPENSION — REAR ARM & SUSPENSION

REF. Nº	CODIGO Nº PART NO.	DESCRIPCION DESCRIPTION	B733					OBSERVACIONES REMARKS
1	B72–F2110–10	BRAZO TRASERO COMPLETO REAR ARM COMP.	1					
2	90387–12863	ESPACIADOR COLLAR	1					
3	2GS–F2141–00	EJE DEL BARCULANTE SHAFT, PIVOT	1					
4	20P–F2129–00	TAPA DE EMPUJE 2 COVER, THRUST 2	2					
5	93317–318Y5	COJINETE BEARING	2					
6	95607–12200	TUERCA DE AUTO-CIERRE NUT, SELF-LOCKING	1					
7	90201–12028	ARANDELA PLANA WASHER, PLATE	1					
8	2GS–F2151–00	SELLO DE GUARDA SEAL, GUARD	1					
9	90387–066J9	ESPACIADOR COLLAR	1					
10	90201–060A3	ARANDELA PLANA WASHER, PLATE	1					
11	95027–06016	PERNO, DE BRIDA BOLT, FLANGE	1					
12	2GS–F1650–00	GUARDABARRO TRANSERO COMP. REAR FENDER COMP.	1					
13	2GS–F1644–00	APOYO TRASERO STAY, REAR	1					
14	2GS–F1645–00	ASIDERO SILLIN STAY, REAR	1					
15	2GS–F164F–00	APOYO 1 STAY 1	2					
16	90387–068N2	ESPACIADOR COLLAR	8					
17	95027–06016	PERNO, DE BRIDA BOLT, FLANGE	8					
18	90183–06800	TUERCA DE RESORTE NUT, SPRING	2					
19	90119–06060	TORNILLO CON ARANDELA BOLT, WITH WASHER	2					
20	21C–F2147–00	PROTECTOR DE CADENA PROTECTOR, CHAIN	1					
21	90387–068S1	ESPACIADOR COLLAR	2					
22	95027–06016	PERNO, DE BRIDA BOLT, FLANGE	2					
23	45D–F1668–00	ETIQUETA DE FRANJA LABEL, TIRE	1					
24	B72–F2210–00	AMORTIGUADOR TRASERO COMPLETO SHOCK ABSORBER ASSY, REAR	1					
25	90387–12845	ESPACIADOR COLLAR	1					
26	90105–12057	TORNILLO BOLT, FLANGE	1					
27	90105–12804	TORNILLO BOLT, FLANGE	1					

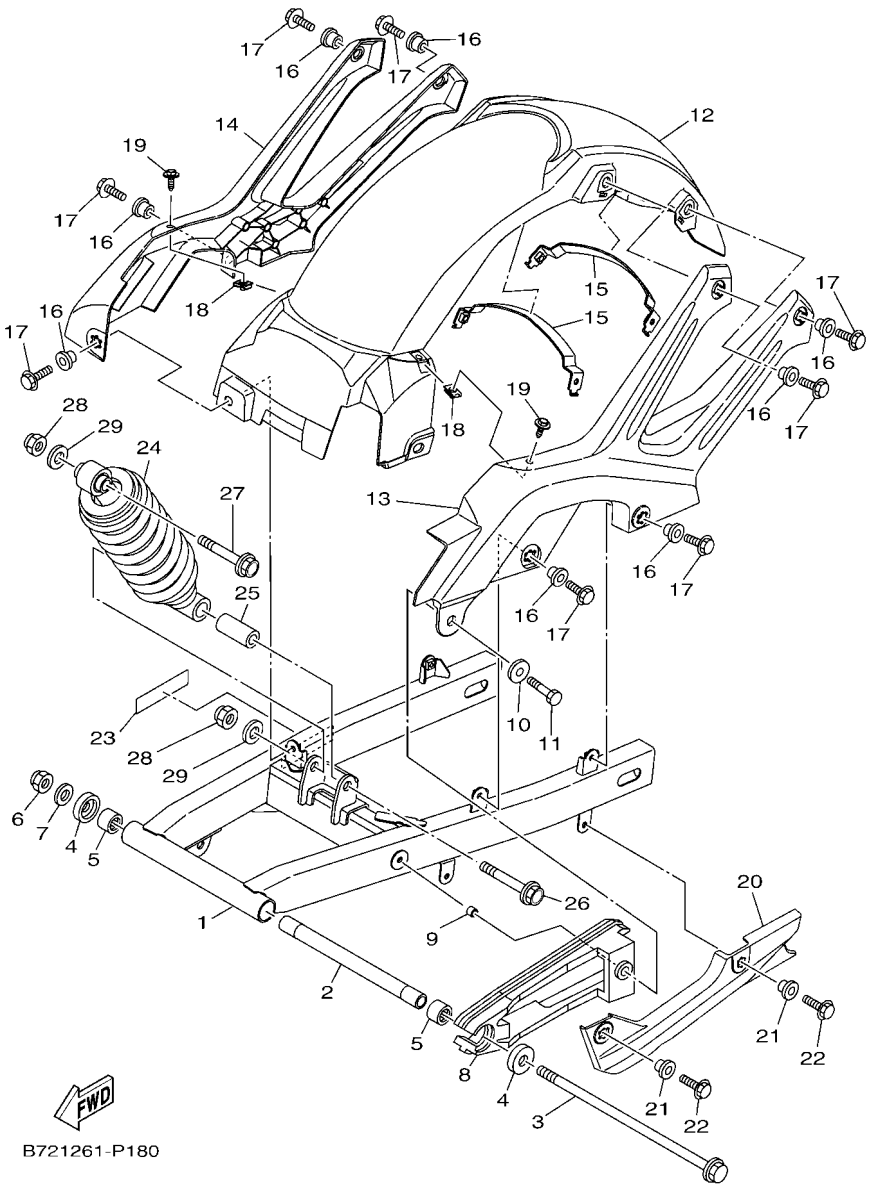

FIG. 18 BRAZO TRASERO & SUSPENSION — REAR ARM & SUSPENSION

REF. Nº	CODIGO Nº PART NO.	DESCRIPCION DESCRIPTION	B733					OBSERVACIONES REMARKS
28	95612–12100	TUERCA U NUT, U	2					
29	90201–122H1	ARANDELA PLANA WASHER, PLATE	2					

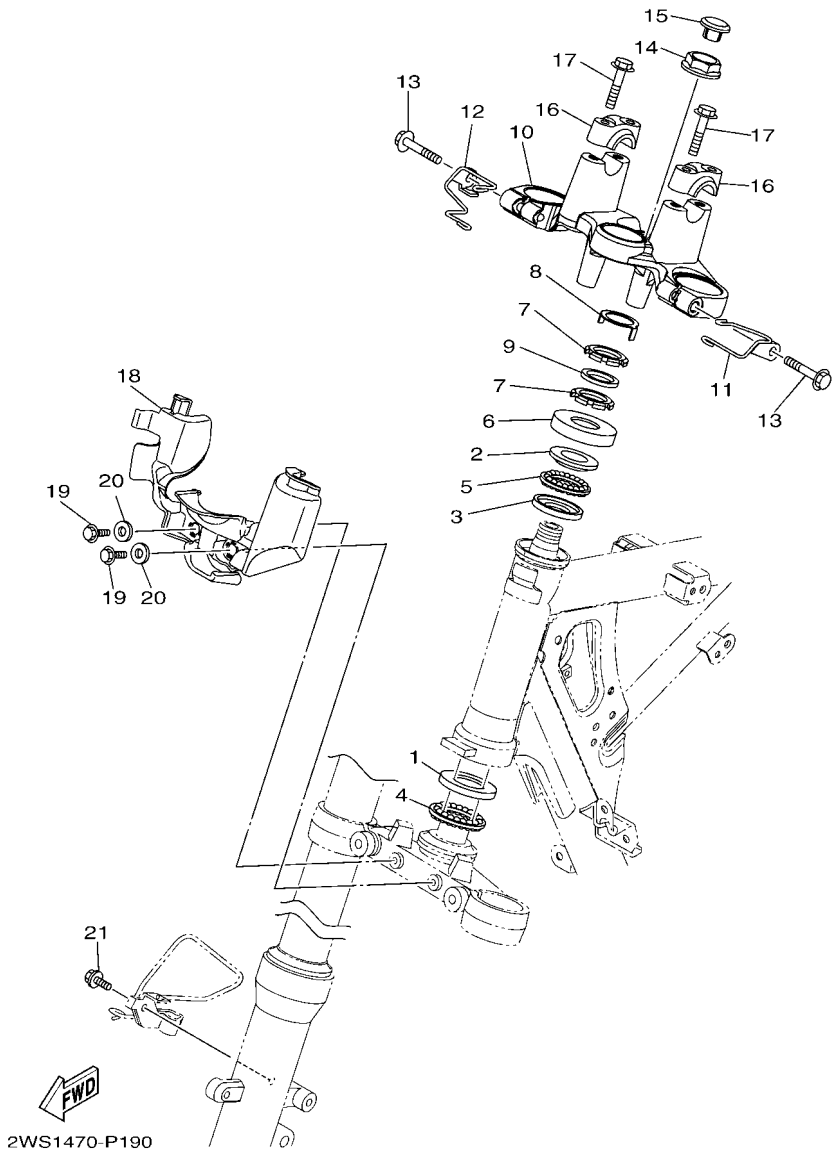

FIG. 19 DIRECCION — STEERING

REF. Nº	CODIGO Nº PART NO.	DESCRIPCION DESCRIPTION	B733					OBSERVACIONES REMARKS
1	21C–F3412–00	PISTA DE BOLAS 2 RACE, BALL 2	1					
2	21C–F3413–00	BASE DE BOLA 3 RACE, BALL 3	1					
3	21C–F3414–00	BASE DE BOLA 4 RACE, BALL 4	1					
4	4LS–F341E–10	RETEN DE COJINETE RETAINER, BALL BEARING	1					
5	4LS–F341E–00	RETEN DE COJINETE RETAINER, BALL BEARING	1					
6	5YY–F3416–00	CUBIERTA DE BASE DE BOLA 2 COVER, BALL RACE 2	1					
7	90179–25615	TUERCA NUT	2					
8	20P–F3418–00	ARANDELA ESPECIAL WASHER, SPECIAL	1					
9	90202–26142	ARANDELA DE PLANA WASHER, PLATE	1					
10	21C–F3435–00	PLATINA SUPERIOR CROWN, HANDLE	1					
11	45S–F6131–00	GUIA DE CABLE 1 GUIDE, CABLE 1	1					
12	45S–F6132–00	GUIA DE CABLE 2 GUIDE, CABLE 2	1					
13	95022–08040	PERNO, DE BRIDA BOLT, FLANGE	2					
14	90201–22018	ARANDELA PLANA WASHER, PLATE	1					
15	90176–22081	TUERCA CORONA NUT, CROWN	1					
16	21C–F3441–00	SOPORTE DE MANUBRIO HOLDER, HANDLE UPPER	2					
17	95022–08035	PERNO, DE BRIDA BOLT, FLANGE	4					
18	2WS–F317F–00	SOPORTE 2 STAY 2	1					
19	95822–06016	TORNILLO DE REBORDE BOLT, FLANGE	2					
20	90387–07819	ESPACIADOR COLLAR	2					
21	95812–06012	TORNILLO DE REBORDE BOLT, FLANGE	1					

FIG. 20 HORQUILLA DELANTERA — FRONT FORK

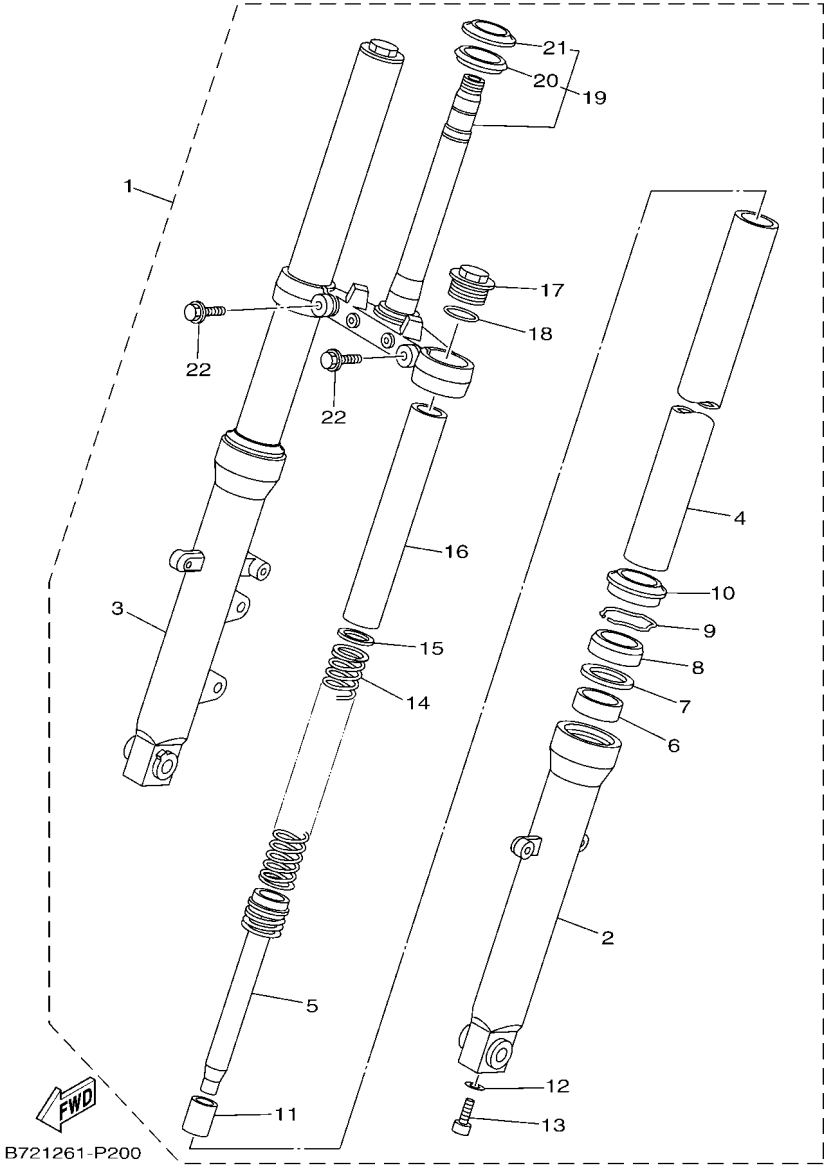

REF. Nº	CODIGO Nº PART NO.	DESCRIPCION DESCRIPTION	B733					OBSERVACIONES REMARKS
1	B72–F3100–00	HORQUILLA DELANTERA COMPLETA FRONT FORK ASSY	1					
2	21C–F3126–11	.TUBO EXTERIOR (IZQUIERDO) .TUBE, OUTER (L.H)	1					
3	21C–F3136–11	.TUBO EXTERIOR 2 .TUBE, OUTER 2	1					
4	21C–F3110–00	.TUBO INTERIOR COMPLETO 1 .INNER TUBE COMP.1	2					
5	2GS–F3170–00	.CILINDRO COMPL DE HORQ DELANT .CYLINDER COMP., FRONT FORK	2					
6	4FM–23125–40	.METAL CORREDIZO 1 .METAL, SLIDE 1	2					
7	21C–F3146–00	.ARANDELA DE SELLO DE ACEITE .WASHER, OIL SEAL	2					
8	2GS–F3145–00	.RETEN DE ACEITE .OIL SEAL	2					
9	21C–F3156–00	.ANILLO DE ENGANCHE .RING, SNAP	2					
10	2GS–F3144–00	.GUARDAPOLVO .SEAL, DUST	2					
11	21C–F3173–00	.VASTAGO AHUSADO .SPINDLE, TAPER	2					
12	21C–F3158–00	.EMPAQUE .GASKET	2					
13	21C–F3181–00	.TORNILLO CABEZAHEXAGONAL .BOLT, HEXAGON SOCKET HEAD	2					
14	21C–F3141–00	.RESORTE HORQUILLA DELANT. .SPRING, FRONT FORK	2					
15	21C–F3149–00	.ARANDELA DE RESORTE SUPERIOR .WASHER, SPRING UPPER	2					
16	21C–F3118–00	.SEPARADOR .SPACER	2					
17	21C–F3111–00	.PERNO DE TAPA .BOLT, CAP	2					
18	21C–F3114–00	.EMPAQUE .GASKET	2					
19	21C–F3340–02	.PLATINA INFERIOR COMPLETA .UNDER BRACKET COMP.	1					
20	5YY–F3462–00	..SELLO PARA POLVO ..SEAL, DUST	1					
21	21C–F3411–00	..PISTA DE BOLAS 1 ..RACE, BALL 1	1					
22	21C–F3346–00	.PERNO 1 .BOLT 1	2					

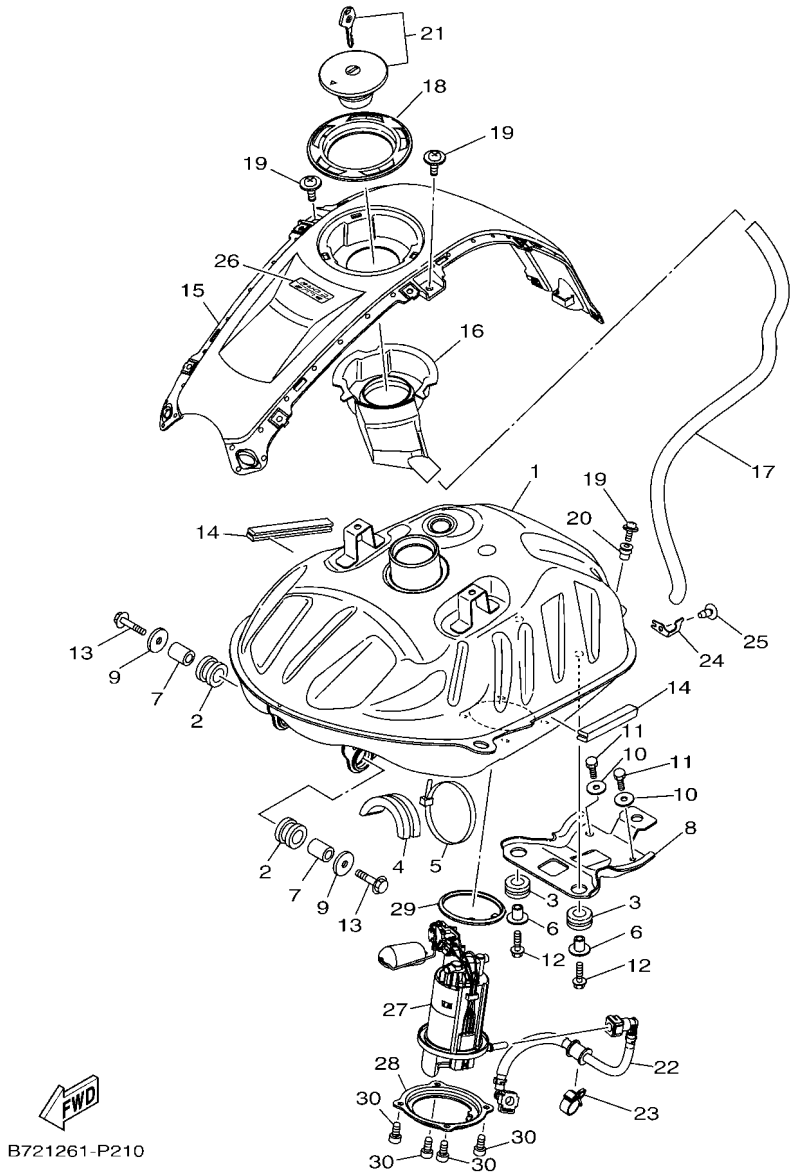

FIG. 21 DEPOSITO DE COMBUSTIBLE — FUEL TANK

REF. Nº	CODIGO Nº PART NO.	DESCRIPCION DESCRIPTION	B733					OBSERVACIONES REMARKS
1	B72–F4110–10	DEPOSITO DE COMBUSTIBLE COMP. FUEL TANK COMP.	1					
2	21C–F4181–00	AMORTIGUADOR DE MONTAJE 1 DAMPER, LOCATING 1	2					
3	90480–15363	TAPON GROMMET	2					
4	21C–F4183–00	AMORTIGUADOR DE MONTAJE 3 DAMPER, LOCATING 3	1					
5	90464–80802	BRIDA CLAMP	1					
6	90387–068B2	ESPACIADOR COLLAR	2					
7	90387–107H6	ESPACIADOR COLLAR	2					
8	2GS–F4191–00	SOPORTE DEPOSITO DE COMBUST.1 BRACKET, FUEL TANK 1	1					
9	90201–060A3	ARANDELA PLANA WASHER, PLATE	2					
10	90201–06380	ARANDELA PLANA WASHER PLAIN	2					
11	97012–06014	PERNO BOLT	2					
12	90105–06169	TORNILLO BOLT, FLANGE	2					
13	95822–06030	TORNILLO DE REBORDE BOLT, FLANGE	2					
14	21C–F4188–10	MOLDURA DEPOSITO COMBUST. MOLD, FUEL TANK	2					
15	B72–F171A–00–P0	CUBIERTA, TECHO COVER, TOP	1					VRC1 PARA YB VRC1 FOR YB
	B72–F171A–00–P3	CUBIERTA, TECHO COVER, TOP	1					S3 PARA VRC1 S3 FOR VRC1
	B72–F171A–00–P4	CUBIERTA, TECHO COVER, TOP	1					DPBML PARA BWC1 DPBML FOR BWC1
16	2GS–F414A–00	CUBIERTA DE LLENADOR COVER, FILLER	1					
17	90445–14808	TUBO HOSE	1					
18	21C–F4614–00–P0	PLACA DE TAPA PLATE, CAP	1					S8 S8
19	90159–05065	TORNILLO CON VALONA SCREW, WITH WASHER	3					
20	90179–05804	TUERCA NUT	1					
21	21C–WF461–11	TAPA DE DEPOSITO COMPLETO CAP ASSY WITH LOCK	1					
22	2GS–E3971–01	ANILLO DE ESPACIADOR PIPE, FUEL 1	1					
23	90464–16006	BRIDA CLAMP	1					
24	2GS–F4364–00	SOPORTE STAY	1					
25	97702–50012	TORNILLO ROSCA HEMBRA SCREW, TAPPING	1					

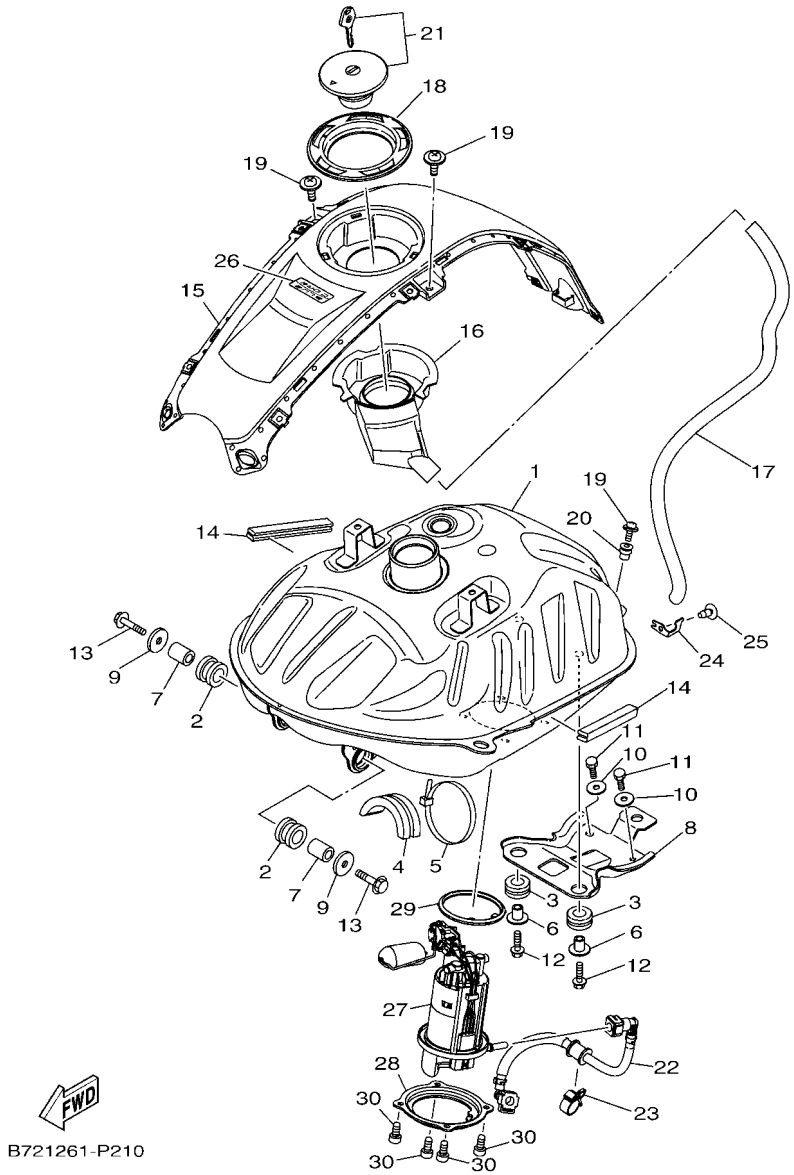

FIG. 21 DEPOSITO DE COMBUSTIBLE — FUEL TANK

REF. Nº	CODIGO Nº PART NO.	DESCRIPCION DESCRIPTION	B733					OBSERVACIONES REMARKS
26	B72–F4549–00	EMBLEMA DE GRIFO DE DEBOSITO EMBLEM, FUEL COCK	1					
27	2GS–E3907–00	BOMBA DE COMBUSTIBLE COMPLETA FUEL PUMP COMP.	1					
28	2GS–F4491–00	SOPORTE BOMBA COMBUSTIBLE BRACKET, FUEL PUMP	1					
29	2GS–F414G–00	SELLO SEAL	1					
30	91312–05010	TORNILLO BOLT	4					

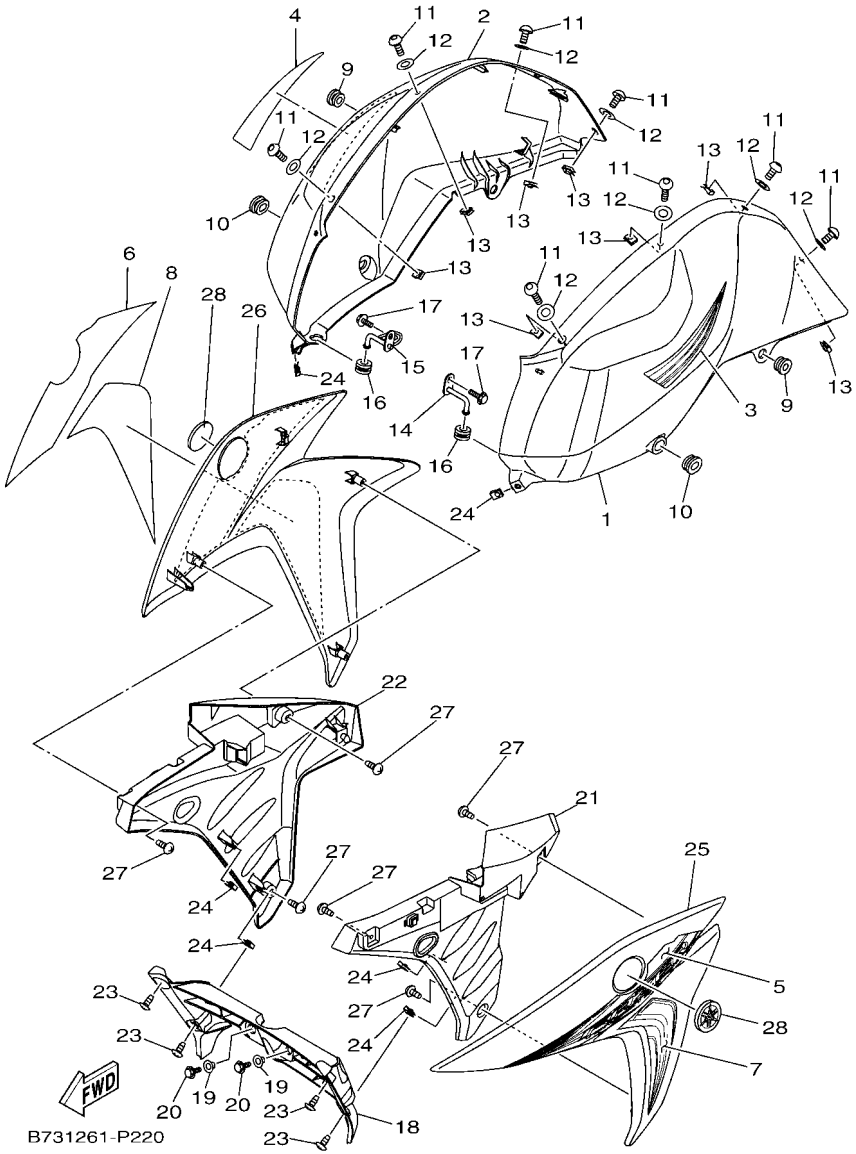

FIG. 22 DEPOSITO DE COMBUSTIBLE 2 — FUEL TANK 2

REF. Nº	CODIGO Nº PART NO.	DESCRIPCION DESCRIPTION	B733					OBSERVACIONES REMARKS
1	B72–F4129–00–33	CUBIERTA LATERAL 1 COVER, SIDE 1	1					UR PARA YB UR FOR YB
	B72–F4129–00–P0	CUBIERTA LATERAL 1 COVER, SIDE 1	1					UR PARA VRC1 UR FOR VRC1
	B72–F4129–00–P2	CUBIERTA LATERAL 1 COVER, SIDE 1	1					UR PARA BWC1 UR FOR BWC1
2	B72–F4139–00–33	CUBIERTA LATERAL 2 COVER, SIDE 2	1					UR PARA YB UR FOR YB
	B72–F4139–00–P0	CUBIERTA LATERAL 2 COVER, SIDE 2	1					UR PARA VRC1 UR FOR VRC1
	B72–F4139–00–P2	CUBIERTA LATERAL 2 COVER, SIDE 2	1					UR PARA BWC1 UR FOR BWC1
3	B73–F4245–00	CALCOMANIA DEPOSITO COMBUST.2 GRAPHIC, FUEL TANK 2	1					UR PARA YB UR FOR YB
	B73–F4245–10	CALCOMANIA DEPOSITO COMBUST.2 GRAPHIC, FUEL TANK 2	1					UR PARA VRC1 UR FOR VRC1
	B73–F4245–20	CALCOMANIA DEPOSITO COMBUST.2 GRAPHIC, FUEL TANK 2	1					UR PARA BWC1 UR FOR BWC1
4	B73–F4246–00	CALCOMANIA 3 GRAPHIC 3	1					UR PARA YB UR FOR YB
	B73–F4246–10	CALCOMANIA 3 GRAPHIC 3	1					UR PARA VRC1 UR FOR VRC1
	B73–F4246–20	CALCOMANIA 3 GRAPHIC 3	1					UR PARA BWC1 UR FOR BWC1
5	B73–F8391–00	CALCOMANIA 1 GRAPHIC 1	1					UR PARA YB UR FOR YB
	B73–F8391–10	CALCOMANIA 1 GRAPHIC 1	1					UR PARA VRC1 UR FOR VRC1
	B73–F8391–20	CALCOMANIA 1 GRAPHIC 1	1					UR PARA BWC1 UR FOR BWC1
6	B73–F8392–00	CALCOMANIA 2 GRAPHIC 2	1					UR PARA YB UR FOR YB
	B73–F8392–10	CALCOMANIA 2 GRAPHIC 2	1					UR PARA VRC1 UR FOR VRC1
	B73–F8392–20	CALCOMANIA 2 GRAPHIC 2	1					UR PARA BWC1 UR FOR BWC1
7	B73–F8393–00	CALCOMANIA 3 GRAPHIC 3	1					UR PARA YB UR FOR YB
	B73–F8393–10	CALCOMANIA 3 GRAPHIC 3	1					UR PARA VRC1 UR FOR VRC1
	B73–F8393–20	CALCOMANIA 3 GRAPHIC 3	1					UR PARA BWC1 UR FOR BWC1
8	B73–F8394–00	CALCOMANIA 4 GRAPHIC 4	1					UR PARA YB UR FOR YB
	B73–F8394–10	CALCOMANIA 4 GRAPHIC 4	1					UR PARA VRC1 UR FOR VRC1
	B73–F8394–20	CALCOMANIA 4 GRAPHIC 4	1					UR PARA BWC1 UR FOR BWC1
9	90480–13398	TAPON GROMMET	2					
10	90480–01559	TAPON GROMMET	2					
11	90160–05812	TORNILLO REDONDO ROSCA HEMBRA SCREW, ROUND TAPPING	8					

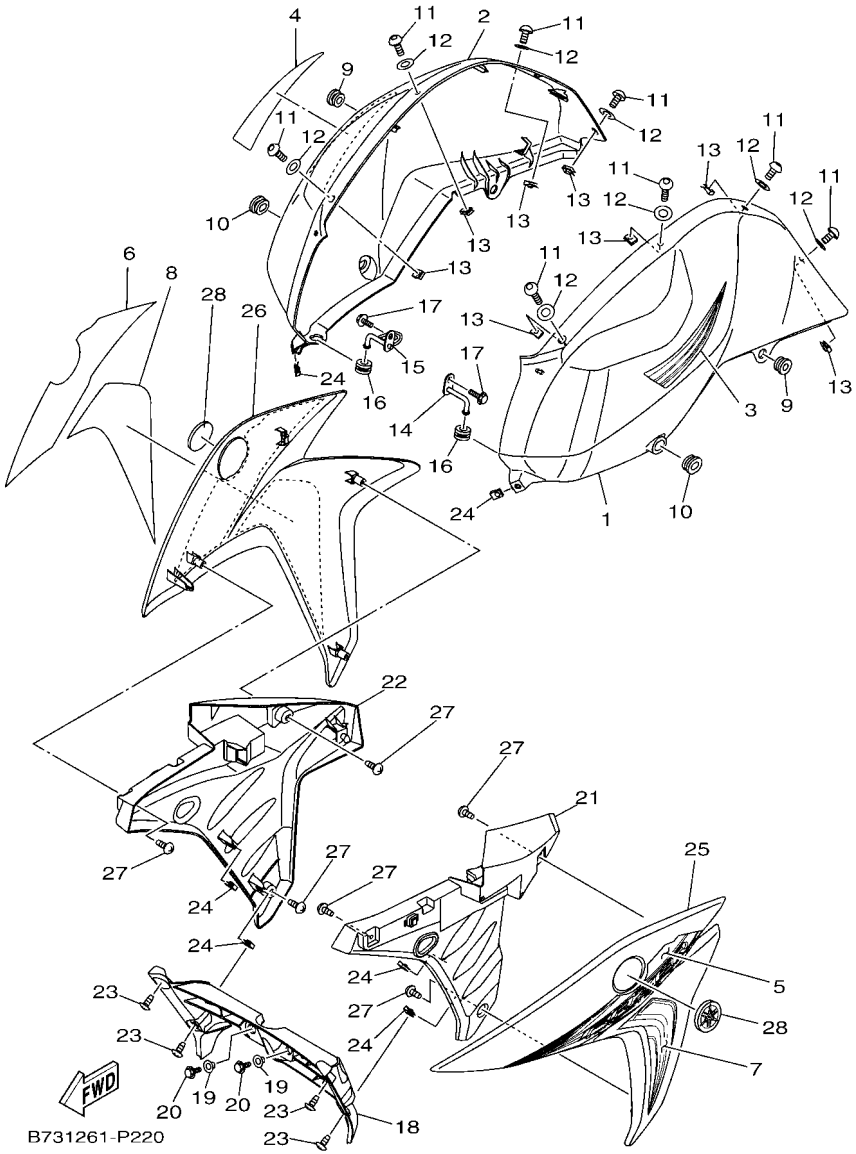

FIG. 22 DEPOSITO DE COMBUSTIBLE 2 — FUEL TANK 2

REF. Nº	CODIGO Nº PART NO.	DESCRIPCION DESCRIPTION	B733					OBSERVACIONES REMARKS
12	90202–05180	ARANDELA DE PLANA WASHER, PLATE	8					
13	90183–05807	TUERCA DE RESORTE NUT, SPRING	8					
14	45S–F411G–00	CUBIERTA COMPL. 1, GUIA DE AIR HOOK, SIDE COVER 1	1					
15	45S–F411H–00	CUBIERTA COMPL. 2, GUIA DE AIR HOOK, SIDE COVER 2	1					
16	90480–14828	TAPON GROMMET	2					
17	95802–06012	TORNILLO DE REBORDE BOLT, FLANGE	2					
18	2WS–F4124–00	ARO RESF DE AIRE AIR SHROUD	1					
19	90387–06048	ESPACIADOR COLLAR	2					
20	95827–06012	TORNILLO BOLT, FLANGE	2					
21	2WS–F137U–00	GUIA DE AIRE 1 GUIDE, AIR 1	1					
22	2WS–F137V–00	GUIA DE AIRE 2 GUIDE, AIR 2	1					
23	97702–50012	TORNILLO ROSCA HEMBRA SCREW, TAPPING	4					
24	90183–05807	TUERCA DE RESORTE NUT, SPRING	4					
25	B73–F835U–00–P0	PANEL 1 PANEL 1	1					VRC1 PARA YB VRC1 FOR YB
	B73–F835U–00–P1	PANEL 1 PANEL 1	1					S3 PARA VRC1 S3 FOR VRC1
	B73–F835U–00–P2	PANEL 1 PANEL 1	1					DPBML PARA BWC1 DPBML FOR BWC1
26	B73–F835V–00–P0	PANEL 2 PANEL 2	1					VRC1 PARA YB VRC1 FOR YB
	B73–F835V–00–P1	PANEL 2 PANEL 2	1					S3 PARA VRC1 S3 FOR VRC1
	B73–F835V–00–P2	PANEL 2 PANEL 2	1					DPBML PARA BWC1 DPBML FOR BWC1
27	97702–50012	TORNILLO ROSCA HEMBRA SCREW, TAPPING	6					
28	B73–F413B–00	EMBLEMA EMBLEM	2					

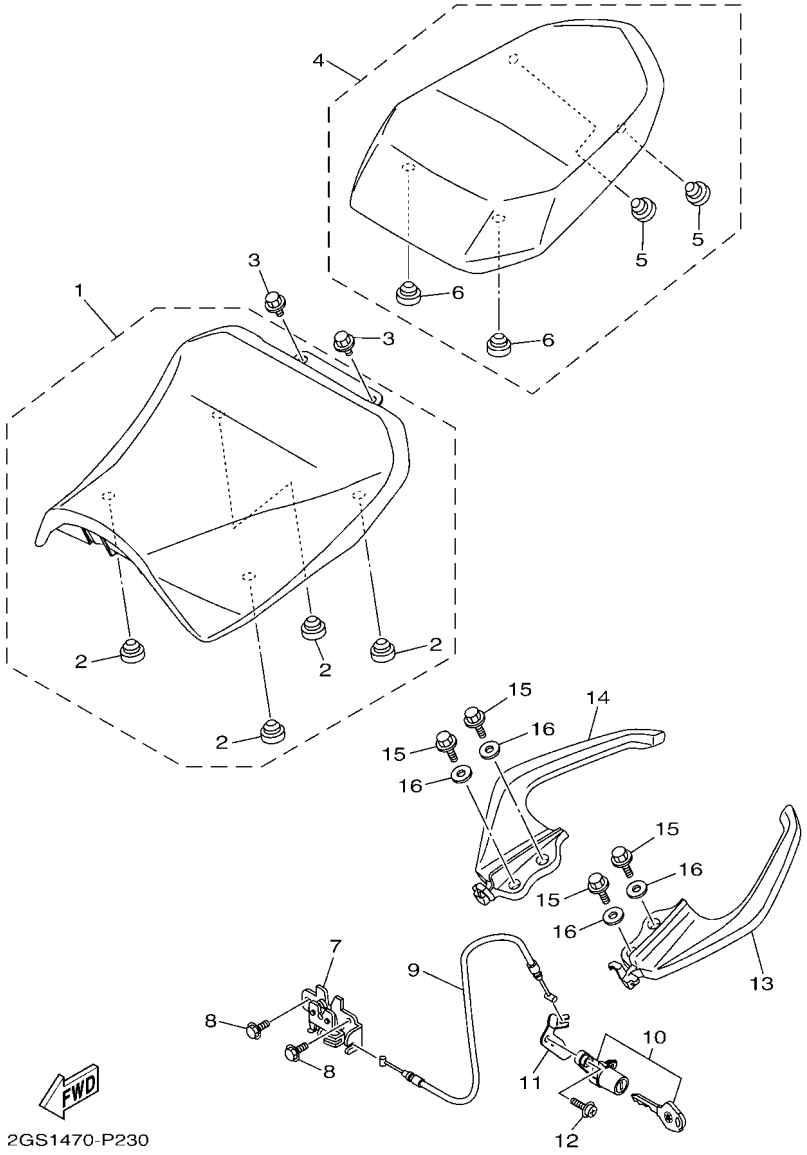

FIG. 23 ASIENTO — SEAT

REF. Nº	CODIGO Nº PART NO.	DESCRIPCION DESCRIPTION	B733					OBSERVACIONES REMARKS
1	B72–F4710–01	ASIENTO SIMPLE COMPLETO SINGLE SEAT ASSY	1					
2	45D–F4741–00	.COJIN DE ASIENTO .PAD, SEAT	4					
3	95022–08012	PERNO, DE BRIDA BOLT, FLANGE	2					
4	B72–F4750–01	ASIENTO TANDEM COMPLETO TANDEM SEAT ASSY	1					
5	2GS–F4741–00	.COJIN DE ASIENTO .PAD, SEAT	2					
6	4LS–F4741–00	.COJIN DE ASIENTO .PAD, SEAT	2					
7	21C–F4780–01	CERRADURA SILLIN COMPLETO SEAT LOCK ASSY	1					
8	95022–06010	PERNO, DE BRIDA BOLT, FLANGE	2					
9	2GS–F478E–00	CABLE CABLE, SEAT LOCK	1					
10	21C–WF479–00	CUBIERTA, DE COLA ROTOR SUB ASSY WITH KEY	1					
11	2GS–F117K–00	SOPORTE DE CERRADURA STAY, LOCK	1					
12	90159–06054	TORNILLO CON VALONA SCREW, WITH WASHER	1					
13	2GS–F474A–00	FIADOR DE EMPUNADURA ASSIST, GRIP	1					
14	2GS–F474W–00	FIADOR DE EMPUNADURA 2 ASSIST,GRIP 2	1					
15	95812–08025	TORNILLO DE REBORDE BOLT, FLANGE	4					
16	92902–08200	ARANDELA WASHER	4					

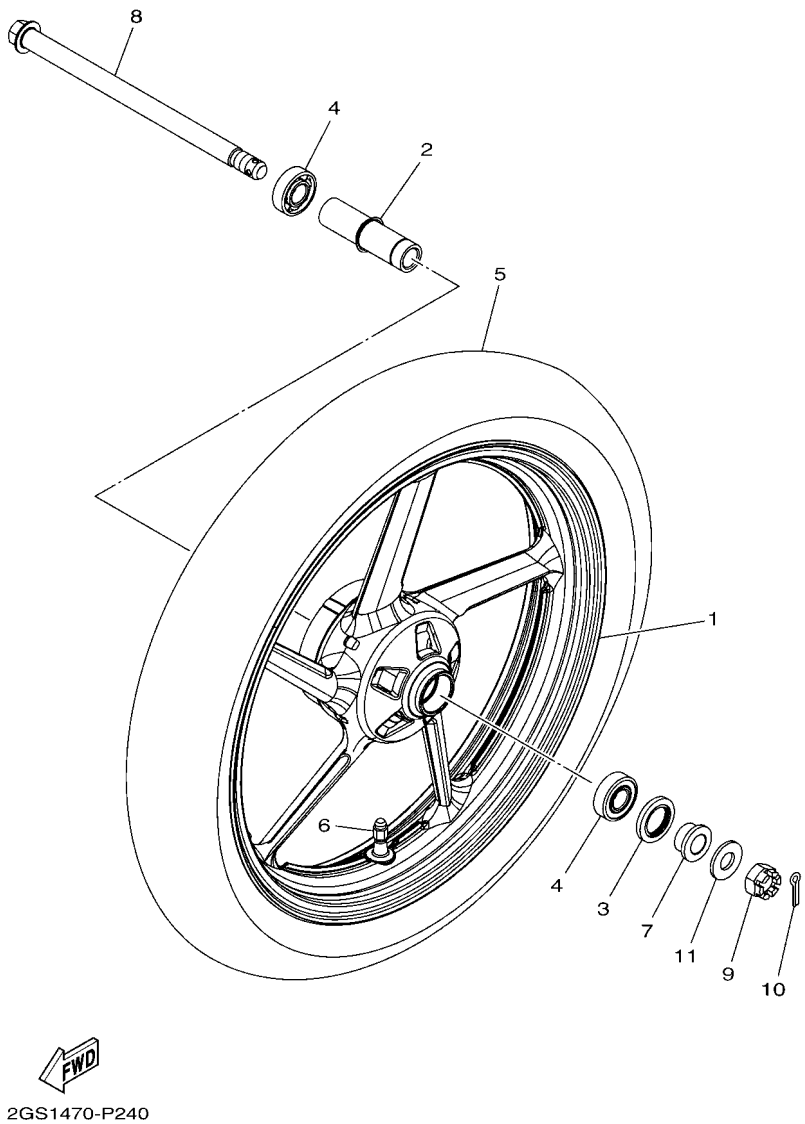

FIG. 24 RUEDA DELANTERA — FRONT WHEEL

REF. Nº	CODIGO Nº PART NO.	DESCRIPCION DESCRIPTION	B733					OBSERVACIONES REMARKS
1	21C–F5168–20–33	RUEDA FUNDIDA DELANTERA CAST WHEEL, FRONT	1					YB YB
2	21C–F510C–10	COLLAR COLLAR ASSY.	1					
3	93106–22808	SELLO ACEITE OIL SEAL	1					
4	93306–252XG	COJINETE BEARING	2					UR UR
	93306–252YH	COJINETE BEARING	2					UR UR
5	94110–17818	NEUMATICO(100/80-17 MC 52P) TIRE (100/80-17 MC 52P)	1					MRF MRF
6	93900–00824	VALVULA VALVE, RIM	1					
7	21C–F5183–01	COLLAR DE RUEDA COLLAR, WHEEL	1					
8	2GS–F5181–00	EJE DE LA RUEDA AXLE, WHEEL	1					
9	90171–14800	TUERCA ENTALLADA NUT, CASTLE	1					
10	90252–55800	PASADOR DE CHAVETA PIN, COTTER	1					
11	92907–14200	ARANDELA WASHER	1					

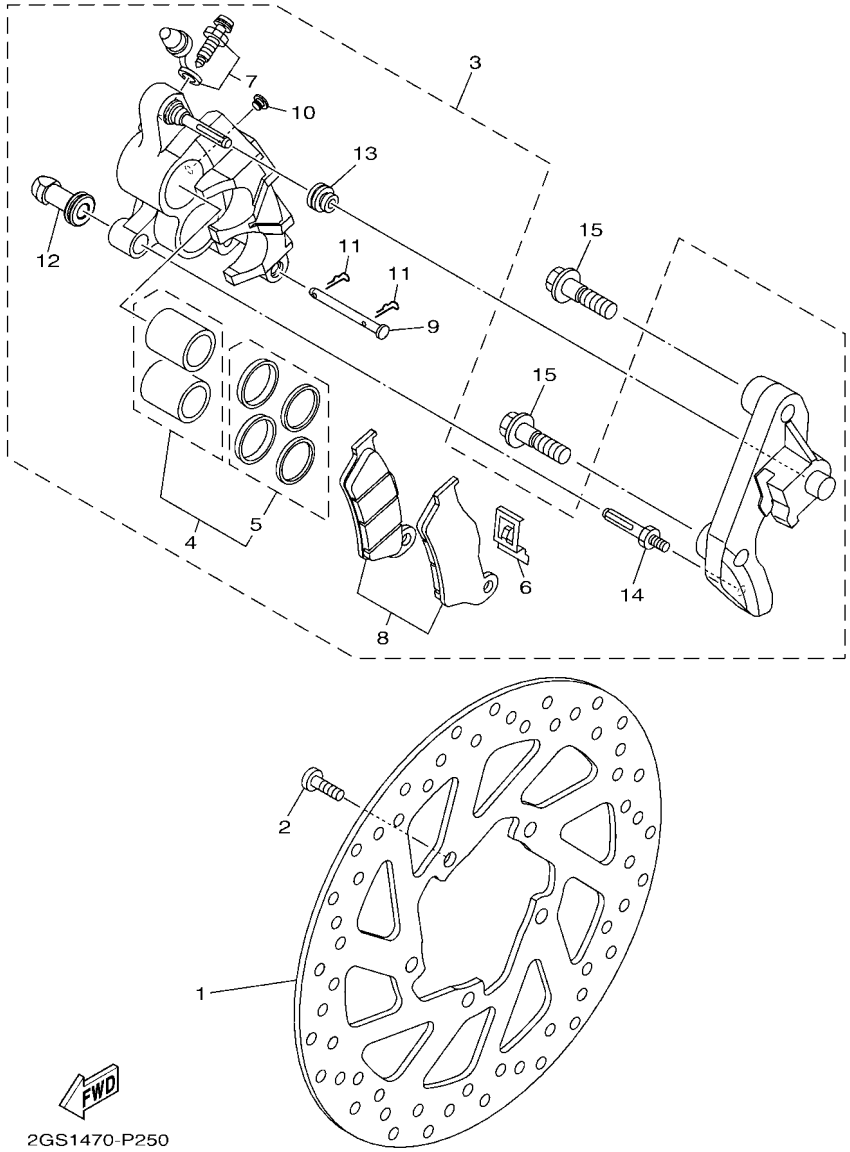

FIG. 25 CALIBRE FRENO DELANTERA — FRONT BRAKE CALIPER

REF. Nº	CODIGO Nº PART NO.	DESCRIPCION DESCRIPTION	B733					OBSERVACIONES REMARKS
1	21C–F582U–00	DISCO DE FRENO (DERECHO) DISK, BRAKE (RIGHT)	1					
2	90111–08029	TORNILLO BOLT,HEX. SOCKET BUTTON	5					
3	2GS–F580U–00	CALIBRE COMPLETO (DERECHO) CALIPER ASSY (RIGHT)	1					
4	54B–W0057–00	.PISTON COMPLETO PINZA .PISTON ASSY, CALIPER	1					
5	54B–W0047–00	..JUEGO DE RETENES DE PINZA ..CALIPER SEAL KIT	1					
6	54B–F5919–00	.SOPORTE DE PASTILLAS .SUPPORT, PAD	1					
7	54B–W0048–00	.CJTO TORNILLO DE PURGA .BLEED SCREW KIT	1					
8	2GS–W0045–00	.JUEGO DE COJIN DE FRENO .BRAKE PAD KIT	1					
9	54B–F5924–00	.PASADOR .PIN, PAD	1					
10	54B–F5916–00	.TAPON .PLUG	1					
11	54B–F5925–00	.PRESILLA .CLIP	2					
12	54B–F5937–00	.FUNDA .BOOT 2	1					
13	54B–F5917–00	.FUNDA DE CALIBRE .BOOT, CALIPER	1					
14	54B–F5926–00	.PERNO .BOLT	1					
15	90105–10319	TORNILLO BOLT, FLANGE	2					

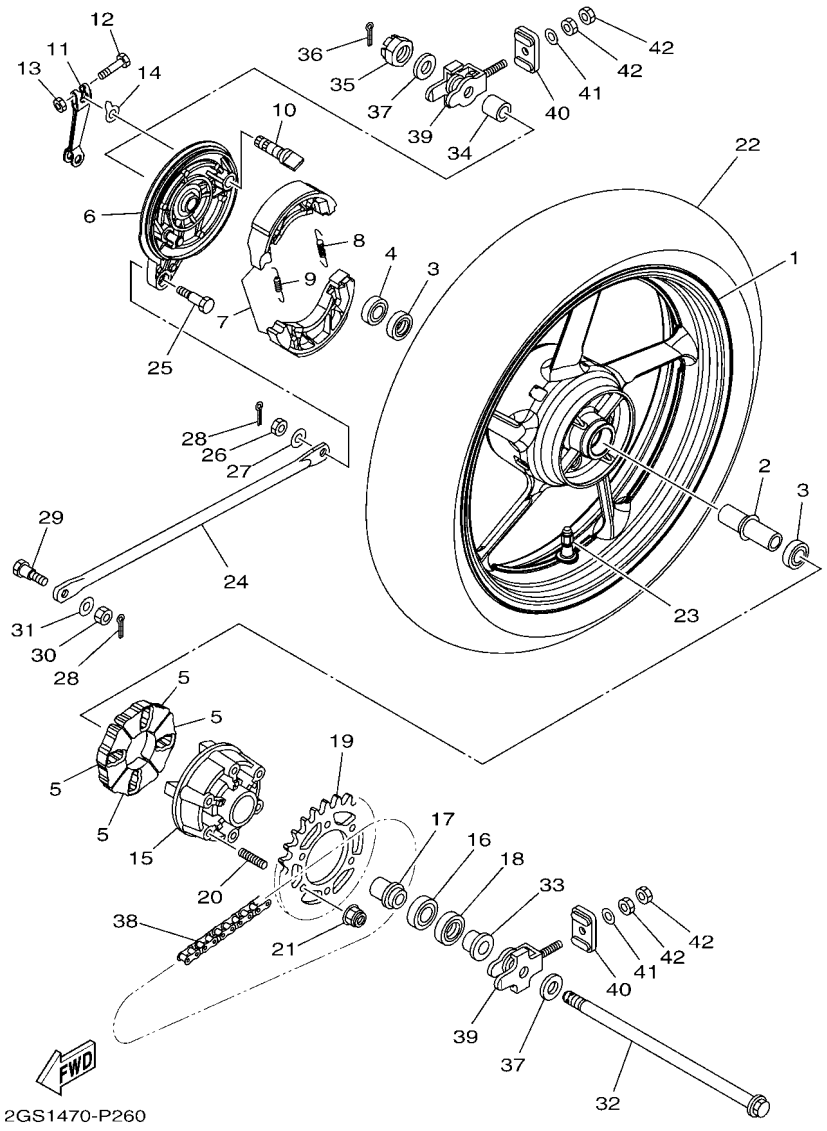

FIG. 26 RUEDA TRASERA — REAR WHEEL

REF. Nº	CODIGO Nº PART NO.	DESCRIPCION DESCRIPTION	B733					OBSERVACIONES REMARKS
1	21C–F5338–20–33	RUEDA FUNDIDA TRASERA CAST WHEEL, REAR	1					YB YB
2	21C–F530S–10	ASAMBLEA DE COLLAR COLLAR ASSY	1					
3	93306–252XG	COJINETE BEARING	2					UR UR
	93306–252YH	COJINETE BEARING	2					UR UR
4	93106–22808	SELLO ACEITE OIL SEAL	1					
5	21C–F5364–00	AMORTIGUADOR DAMPER	4					
6	5US–F5321–10	PLACA DE ZAPATA DE FRENO PLATE, BRAKE SHOE	1					
7	5YY–WF533–00	JUEGO DE ZAPATA DE FRENO BRAKE SHOE KIT	1					
8	90506–12001	RESORTE DE TENSION SPRING, TENSION	1					
9	90506–15001	RESORTE DE TENSION SPRING, TENSION	1					
10	5YY–F5351–00	ARBOL DE LEVAS CAMSHAFT	1					
11	21C–F5355–01	PALANCA DE ARBOL DE LEVAS LEVER, CAMSHAFT	1					
12	90101–06046	TORNILLO BOLT	1					
13	95307–06600	TUERCA NUT	1					
14	36L–F533A–00	PLACA INDICADOR PLATE, INDICATOR	1					
15	20P–F5366–00–33	EMBRAGUE DE MASA CLUTCH, HUB	1					YB YB
16	93306–054YA	COJINETE BEARING	1					UR UR
	93306–054Y5	COJINETE BEARING	1					UR UR
17	20P–F5377–00	COLLAR DE RUEDA COLLAR, WHEEL	1					
18	93106–26801	SELLO ACEITE OIL SEAL	1					
19	B72–F5441–00	CORONA (41T) SPROCKET, DRIVEN (41T)	1					
20	90116–08826	ESPARRAGO BOLT, STUD	6					
21	95602–08200	TUERCA DE AUTO-CIERRE NUT, U FLANGE	6					
22	94114–17801	NEUMATICO(140/60 R17 MC 63P) TIRE (140/60 R17 MC 63P)	1					MRF MRF
23	93900–00824	VALVULA VALVE, RIM	1					
24	21C–F5371–00	BARRA TENSORA BAR, TENSION	1					
25	90109–08063	PERNO BOLT	1					

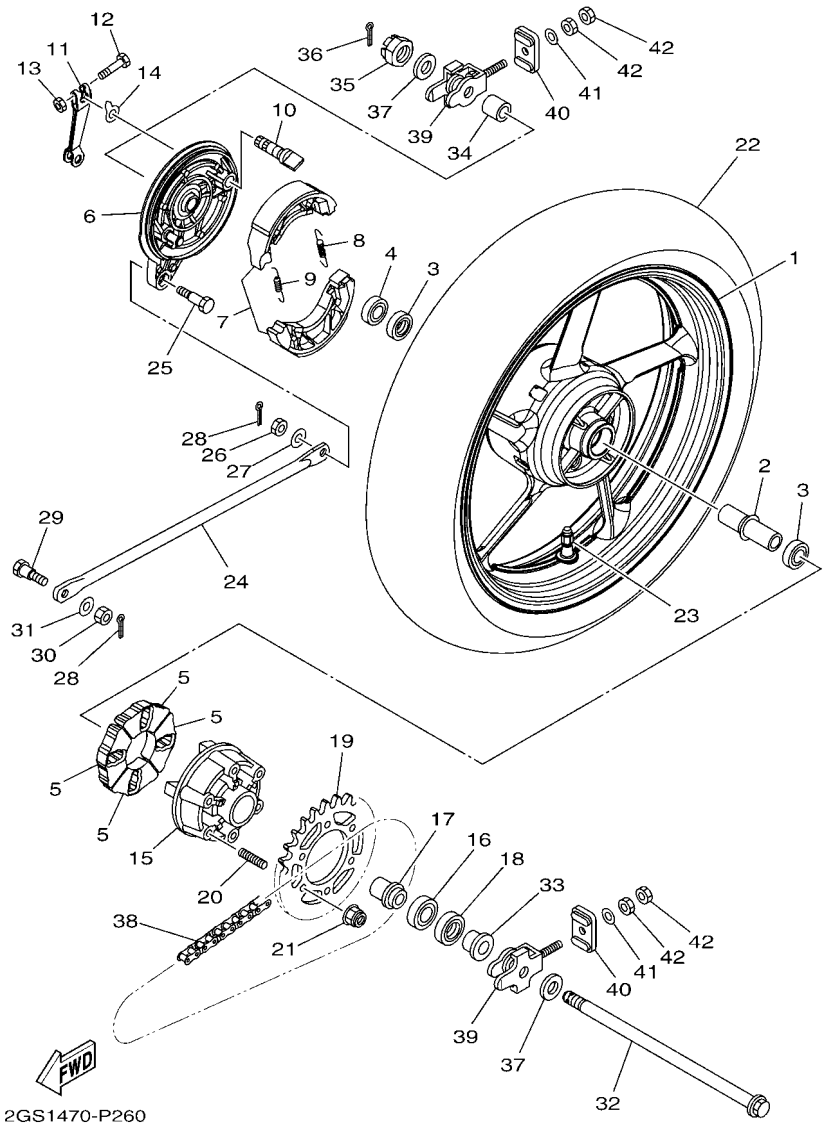

FIG. 26 RUEDA TRASERA — REAR WHEEL

REF. Nº	CODIGO Nº PART NO.	DESCRIPCION DESCRIPTION	B733					OBSERVACIONES REMARKS
26	95302–08700	TUERCA NUT, HEXAGON	1					
27	90201–08326	ARANDELA PLANA WASHER, PLATE	1					
28	91401–20012	CHAVETA PIN, COTTER	2					
29	90109–08831	PERNO BOLT	1					
30	95302–08600	TUERCA NUT, HEXAGON	1					
31	92902–08200	ARANDELA WASHER	1					
32	2GS–F5381–00	EJE DE RUEDA AXLE, WHEEL	1					
33	21C–F5377–01	COLLAR DE RUEDA COLLAR, WHEEL	1					
34	21C–F5383–10	COLLAR DE RUEDA COLLAR, WHEEL	1					
35	90171–14800	TUERCA ENTALLADA NUT, CASTLE	1					
36	90252–55800	PASADOR DE CHAVETA PIN, COTTER	1					
37	90201–15814	ARANDELA PLANA WASHER, PLATE	2					
38	94568–B5128	CADENA (R428HBSX-128-2) CHAIN (R428HBSX-128-2)	1					
39	21C–F5388–11	TIRADOR DE CADENA 1 PULLER, CHAIN 1	2					
40	21C–F2174–00	EXTREMO 1 END 1	2					
41	92902–08600	ARANDELA WASHER, PLATE	2					
42	95302–08600	TUERCA NUT, HEXAGON	4					

FIG. 27 MANILLAR & CABLE — STEERING HANDLE & CABLE

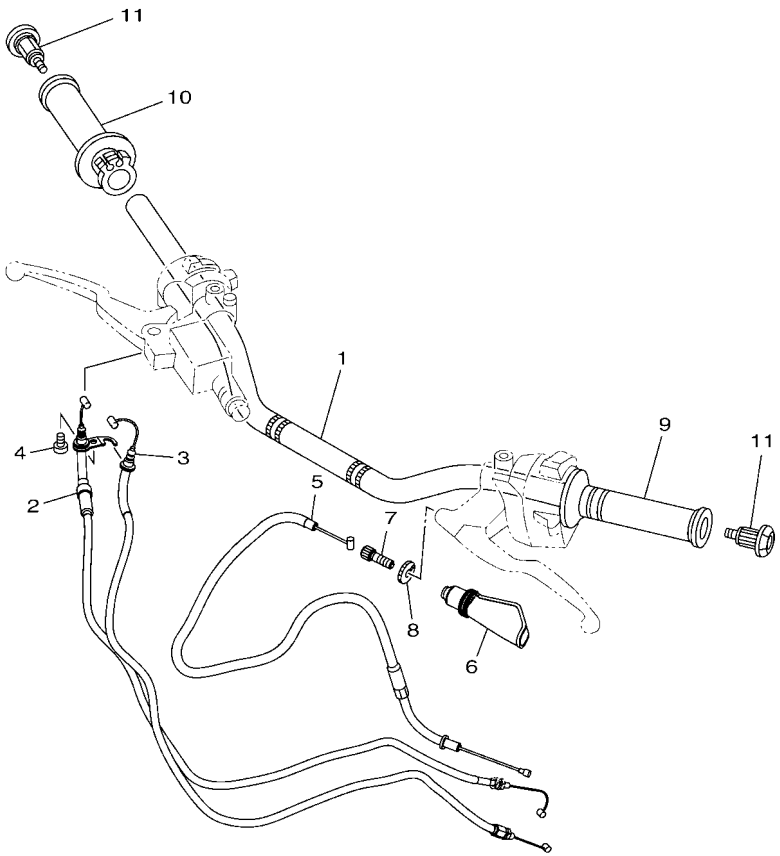

2GS1470-P270

REF. Nº	CODIGO Nº PART NO.	DESCRIPCION DESCRIPTION	B733					OBSERVACIONES REMARKS
1	1EP–F6111–00	MANUBRIO HANDLEBAR	1					
2	2GS–F6311–00	CABLE DE ACELERADOR 1 CABLE, THROTTLE 1	1					
3	2GS–F6312–00	CABLE DE ACELERADOR 2 CABLE, THROTTLE 2	1					
4	98507–05012	TORNILLO DE CABEZA PLANA SCREW, PAN HEAD	1					
5	21C–F6335–02	CABLE DE EMBRAGUE CABLE, CLUTCH	1					
6	4TL–F6372–00	CUBIERTA DE PALANCA DE MANUB 1 COVER, HANDLE LEVER 1	1					
7	90123–08046	PERNO BOLT	1					
8	90179–08148	TUERCA NUT	1					
9	21C–F6241–00	EMPUNADURA GRIP	1					
10	21C–F6240–10	EMPUNADURA COMPLETA GRIP ASSY	1					
11	21C–F620B–21	EXTREMO DE EMPUNADURA END GRIP ASSY	2					

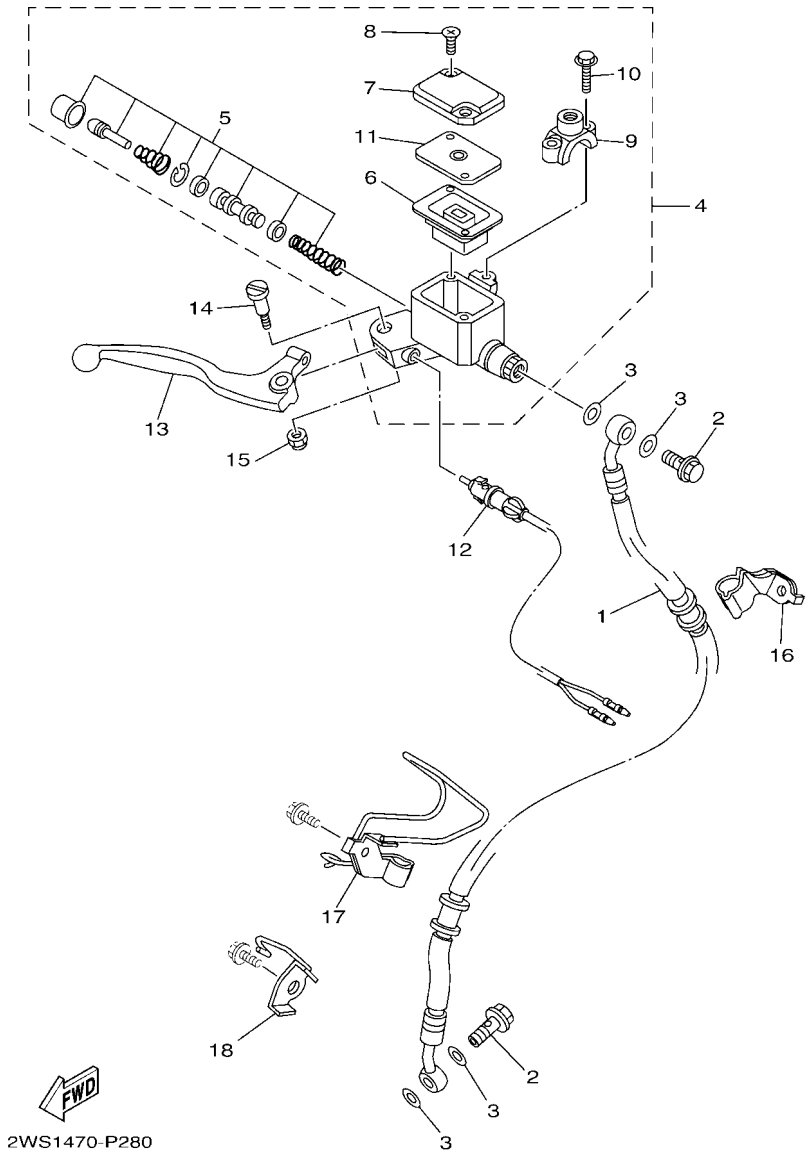

FIG. 28 CILINDRO MAESTRO DELANTERO — FRONT MASTER CYLINDER

REF. Nº	CODIGO Nº PART NO.	DESCRIPCION DESCRIPTION	B733					OBSERVACIONES REMARKS
1	21C–F5872–00	MANGUERA DE FRENO 1 HOSE, BRAKE 1	1					
2	90401–10818	PERNO DE UNION BOLT, UNION	2					
3	90201–10815	ARANDELA PLANA WASHER, PLATE	4					
4	54B–WF587–00	CILINDRO MAESTRO SUB COMPLET MASTER CYLINDER SUB ASSY	1					
5	54B–W0041–00	.JUEGO DE CILINDRO MAESTRO .CYLINDER KIT, MASTER	1					
6	54B–F5854–00	.EMPAQUE,DIAFRAGMA .DIAPHRAGM, RESERVOIR	1					
7	54B–F5852–00	.TAPA DE TANQUE DE RESERVA .CAP, RESERVOIR	1					
8	54B–F589H–00	.TORNILLO .SCREW	2					
9	5YY–F5867–00	.SOPORTE DE CILINDRO MAESTRO .BRACKET, MASTER CYLINDER	1					
10	90105–06859	.TORNILLO .BOLT, FLANGE	2					
11	54B–F5855–00	.BUJE DE DIAFRAGMA .BUSH,DIAPHRAGM	1					
12	54B–H3980–01	INTERRUP. DE PARADA DELANTERO FRONT STOP SWITCH ASSY	1					
13	54B–H3922–00	PALANCA 2 LEVER 2	1					
14	90109–06859	PERNO BOLT	1					
15	54B–F6338–00	TUERCA DE AJUSTE NUT, ADJUSTING	1					
16	45S–F5875–00	SOPORTE DE MANGUERA FRENO 1 HOLDER, BRAKE HOSE 1	1					
17	45S–F5876–00	SOPORTE DE MANGUERA FRENO 2 HOLDER, BRAKE HOSE 2	1					
18	21C–F3317–00	SOSTEN DE CABLE HOLDER, CABLE	1					

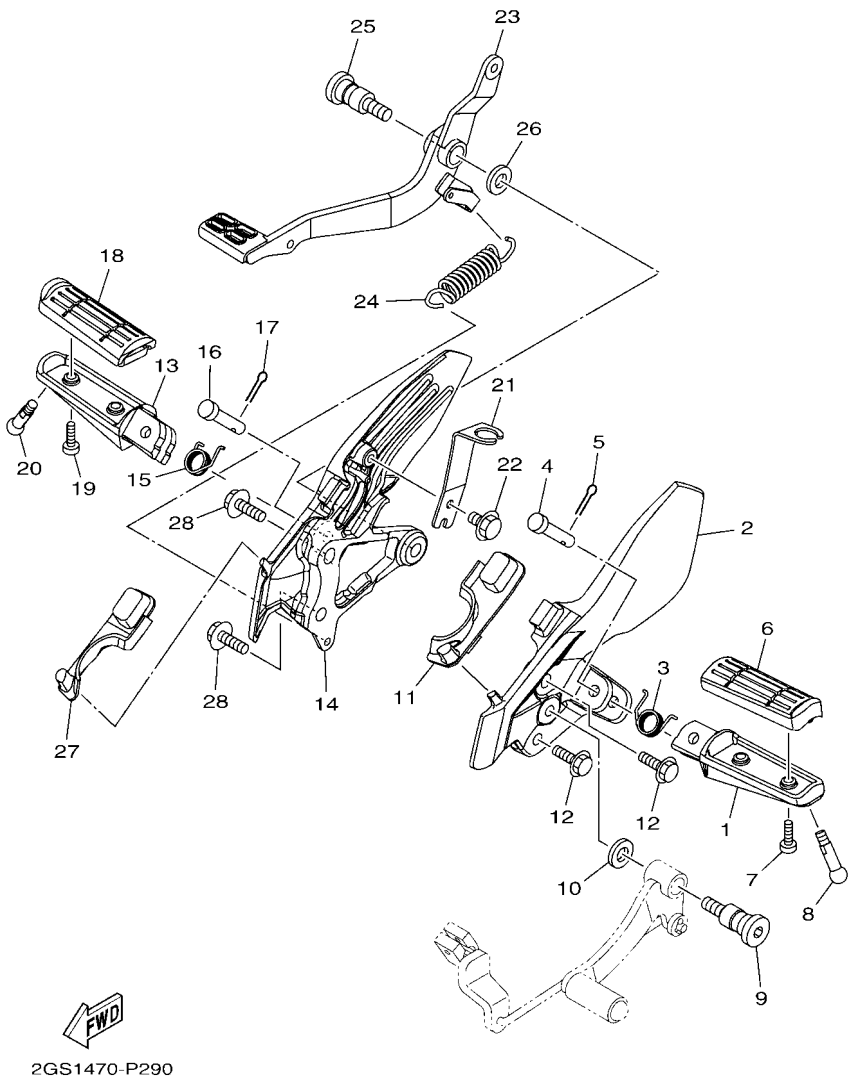

FIG. 29 SOPORTE & APOYAPIE — STAND & FOOTREST

REF. Nº	CODIGO Nº PART NO.	DESCRIPCION DESCRIPTION	B733					OBSERVACIONES REMARKS
1	45D–F7451–00	APOYAPIE FOOTREST	1					
2	B72–F7452–00	SOPORTE, DE APOYAPIE 1 BRACKET, FOOTREST 1	1					
3	90508–183B9	RESORTE DE TORSION SPRING, TORSION	1					
4	91701–08040	PASADOR DE ABRAZADERA PIN	1					
5	91401–25015	CHAVETA PIN, COTTER	1					
6	21C–F7413–01	CUBIERTA DE APOYAPIE COVER, FOOTREST	1					
7	98502–05014	TORNILLO SCREW, PAN HEAD	2					
8	90109–08202	PERNO BOLT	1					
9	45D–F7261–00	EJE SHAFT	1					
10	90201–10841	ARANDELA PLANA WASHER, PLATE	1					
11	2GS–F7414–00	AMORTIGUADOR DE APOYAPIE DAMPER, FOOTREST	1					
12	95812–08025	TORNILLO DE REBORDE BOLT, FLANGE	2					
13	45D–F7461–00	APOYAPIE FOOTREST	1					
14	B72–F7462–00	SOPORTE, DE APOYAPIE 2 BRACKET, FOOTREST 2	1					
15	90508–183B9	RESORTE DE TORSION SPRING, TORSION	1					
16	91701–08040	PASADOR DE ABRAZADERA PIN	1					
17	91401–25015	CHAVETA PIN, COTTER	1					
18	21C–F7413–01	CUBIERTA DE APOYAPIE COVER, FOOTREST	1					
19	98502–05014	TORNILLO SCREW, PAN HEAD	2					
20	90109–08202	PERNO BOLT	1					
21	2GS–F144G–00	SOPORTE DE INTERRUPTOR STAY, STOP SWITCH	1					
22	95802–06010	TORNILLO DE REBORDE BOLT, FLANGE	1					
23	45D–F7211–00	PEDAL DE FRENO PEDAL, BRAKE	1					
24	90506–26807	RESORTE DE TENSION SPRING, TENSION	1					
25	45D–F7261–00	EJE SHAFT	1					
26	90201–10841	ARANDELA PLANA WASHER, PLATE	1					
27	2GS–F7424–00	AMORTIGUADOR DE APOYAPIE 2 DAMPER, FOOTREST 2	1					

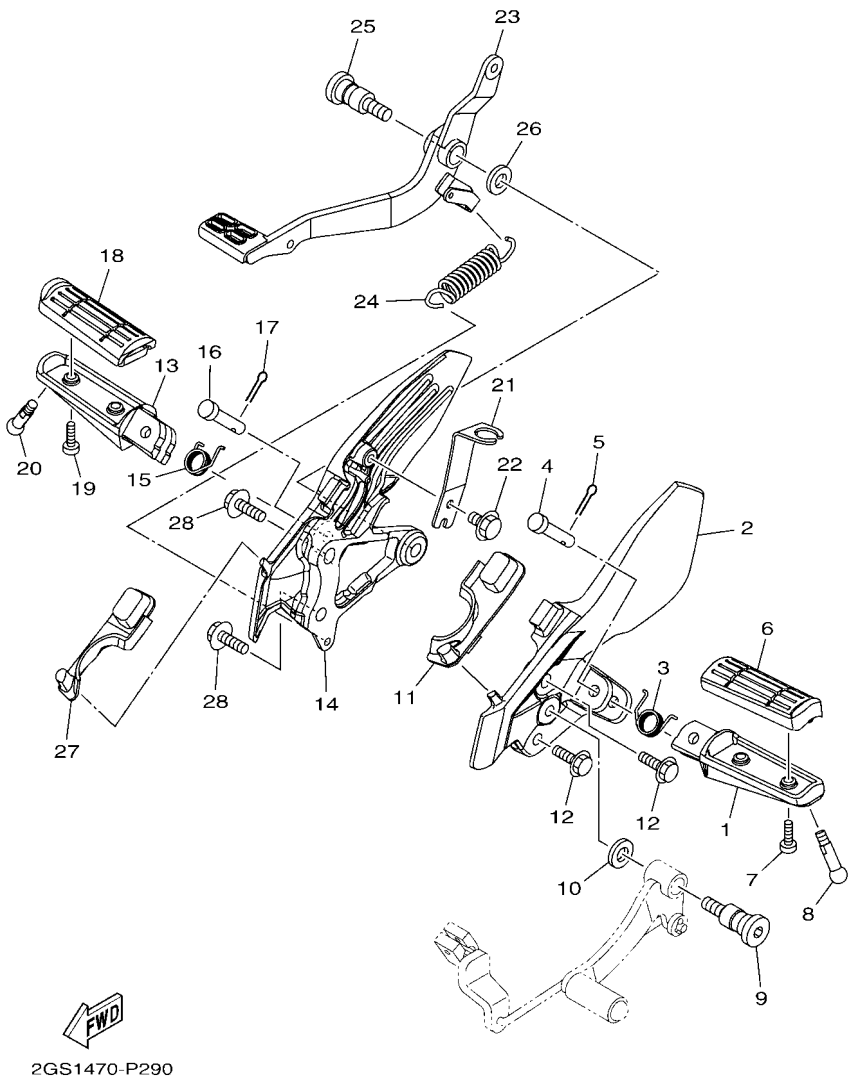

FIG. 29 SOPORTE & APOYAPIE — STAND & FOOTREST

REF. Nº	CODIGO Nº PART NO.	DESCRIPCION DESCRIPTION	B733					OBSERVACIONES REMARKS
28	95812–08025	TORNILLO DE REBORDE BOLT, FLANGE	2					

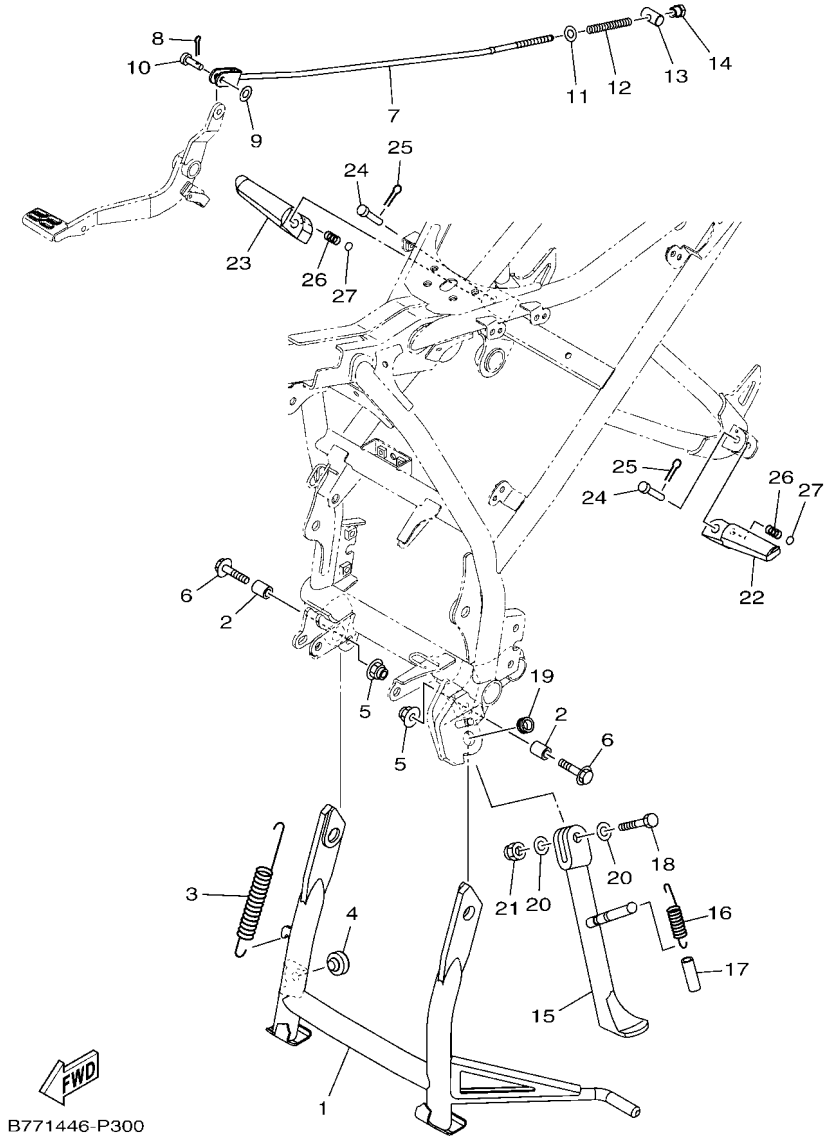

FIG. 30 SOPORTE & APOYAPIE 2 — STAND & FOOTREST 2

REF. Nº	CODIGO Nº PART NO.	DESCRIPCION DESCRIPTION	B733					OBSERVACIONES REMARKS
1	1EP–F7111–00	PUNTAL PRINCIPAL STAND, MAIN	1					
2	90387–10822	ESPACIADOR COLLAR	2					
3	90506–35816	RESORTE DE TENSION SPRING, TENSION	1					
4	21C–F7114–00	TOPE DE PUNTAL PRINCIPAL STOPPER, MAIN STAND	1					
5	95602–10200	TUERCA DE AUTO-CIERRE NUT, U FLANGE	2					
6	95812–10035	TORNILLO DE REBORDE BOLT, FLANGE	2					
7	45D–F7231–00	VARILLA DE FRENO ROD, BRAKE	1					
8	91401–20012	CHAVETA PIN, COTTER	1					
9	92902–06200	ARANDELA WASHER	1					
10	90240–06804	PASADOR CON HOYO PIN, CLEVIS	1					
11	92902–06200	ARANDELA WASHER	1					
12	90501–10815	RESORTE DE COMPRESION SPRING, COMPRESSION	1					
13	90249–12008	PASADOR PIN	1					
14	90179–06806	TUERCA NUT	1					
15	45D–F7311–00	PUNTAL LATERAL STAND, SIDE	1					
16	90506–23807	RESORTE DE TENSION SPRING, TENSION	1					
17	90445–13806	TUBO HOSE	1					
18	90101–10812	TORNILLO BOLT	1					
19	90387–10003	ESPACIADOR COLLAR	1					
20	90201–10841	ARANDELA PLANA WASHER, PLATE	2					
21	90185–10811	TUERCA AUTOBLOCANTE NUT, SELF-LOCKING	1					
22	20P–F7431–00	APOYAPIE POSTERIOR 1 FOOTREST, REAR 1	1					
23	20P–F7441–00	APOYAPIE POSTERIOR 2 FOOTREST, REAR 2	1					
24	91701–08035	PASADOR DE ABRAZADERA PIN	2					
25	91401–25015	CHAVETA PIN, COTTER	2					
26	90501–12743	RESORTE DE COMPRESION SPRING, COMPRESSION	2					
27	93501–04805	BOLA BALL	2					

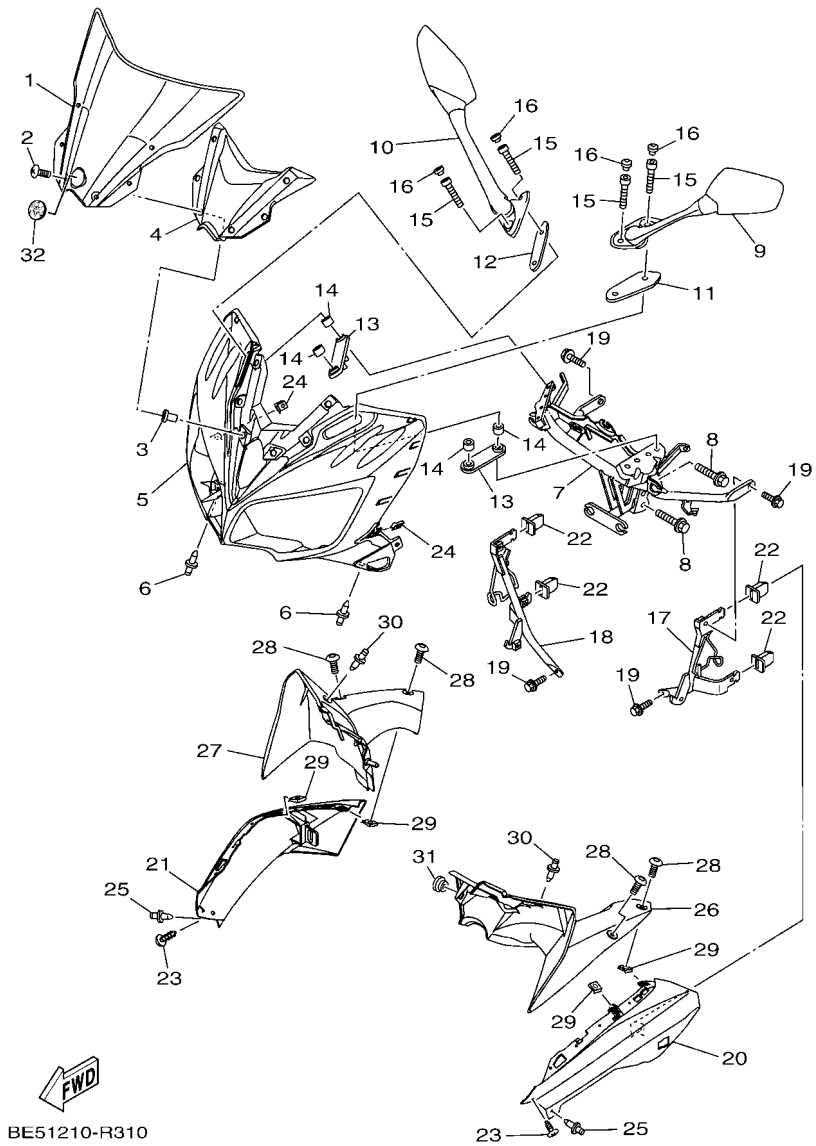

FIG. 31 BOVEDA 1 — COWLING 1

REF. Nº	CODIGO Nº PART NO.	DESCRIPCION DESCRIPTION	B733					OBSERVACIONES REMARKS
1	2WS–F8381–00	PARABRISA WINDSHIELD	1					
2	90150–05024	TORNILLO CABEZA REDONDA SCREW, ROUND HEAD	6					
3	90179–05804	TUERCA NUT	6					
4	2WS–F836K–00	PANEL 1 PANEL, INNER 1	1					
5	B73–F835G–00–33	CARROCERIA, DELANT. SUP. 1 BODY, FRONT UPPER 1	1					UR PARA YB UR FOR YB
	B73–F835G–00–P0	CARROCERIA, DELANT. SUP. 1 BODY, FRONT UPPER 1	1					UR PARA VRC1 UR FOR VRC1
	B73–F835G–00–P1	CARROCERIA, DELANT. SUP. 1 BODY, FRONT UPPER 1	1					UR PARA BWC1 UR FOR BWC1
6	90269–06814	REMACHE RIVET	2					
7	45S–F8356–02	SOPORTE 1 STAY 1	1					
8	95812–08035	TORNILLO DE REBORDE BOLT, FLANGE	2					
9	2WS–F6280–00	ESPEJO COMPLETO (IZQUIERDO) REAR VIEW MIRROR ASSY (LEFT)	1					
10	2WS–F6290–00	ESPEJO COMPLETO (DERECHO) REAR VIEW MIRROR ASSY (RIGHT)	1					
11	45S–F8483–00	PLACA 1 PLATE, RUBBER 1	1					
12	45S–F8484–00	PLACA 2 PLATE, RUBBER 2	1					
13	45S–F8485–00	PLACA 3 PLATE, RUBBER 3	2					
14	90387–068C2	ESPACIADOR COLLAR	4					
15	91317–06030	PERNO BOLT,HEX.SOCKET HEAD	4					
16	20P–F3469–00	TAPA DE PERNO CAP, BOLT	4					
17	45S–F831T–00	APOYO 1 STAY, SUPPORT 1	1					
18	45S–F832T–00	APOYO 2 STAY, SUPPORT 2	1					
19	95812–06012	TORNILLO DE REBORDE BOLT, FLANGE	4					
20	B73–F117V–00–33	CUBIERTA 7 COVER 7	1					UR PARA YB UR FOR YB
	B73–F117V–00–P0	CUBIERTA 7 COVER 7	1					UR PARA VRC1 UR FOR VRC1
	B73–F117V–00–P1	CUBIERTA 7 COVER 7	1					UR PARA BWC1 UR FOR BWC1
21	B73–F117W–00–33	CUBIERTA 8 COVER 8	1					UR PARA YB UR FOR YB
	B73–F117W–00–P0	CUBIERTA 8 COVER 8	1					UR PARA VRC1 UR FOR VRC1
	B73–F117W–00–P1	CUBIERTA 8 COVER 8	1					UR PARA BWC1 UR FOR BWC1

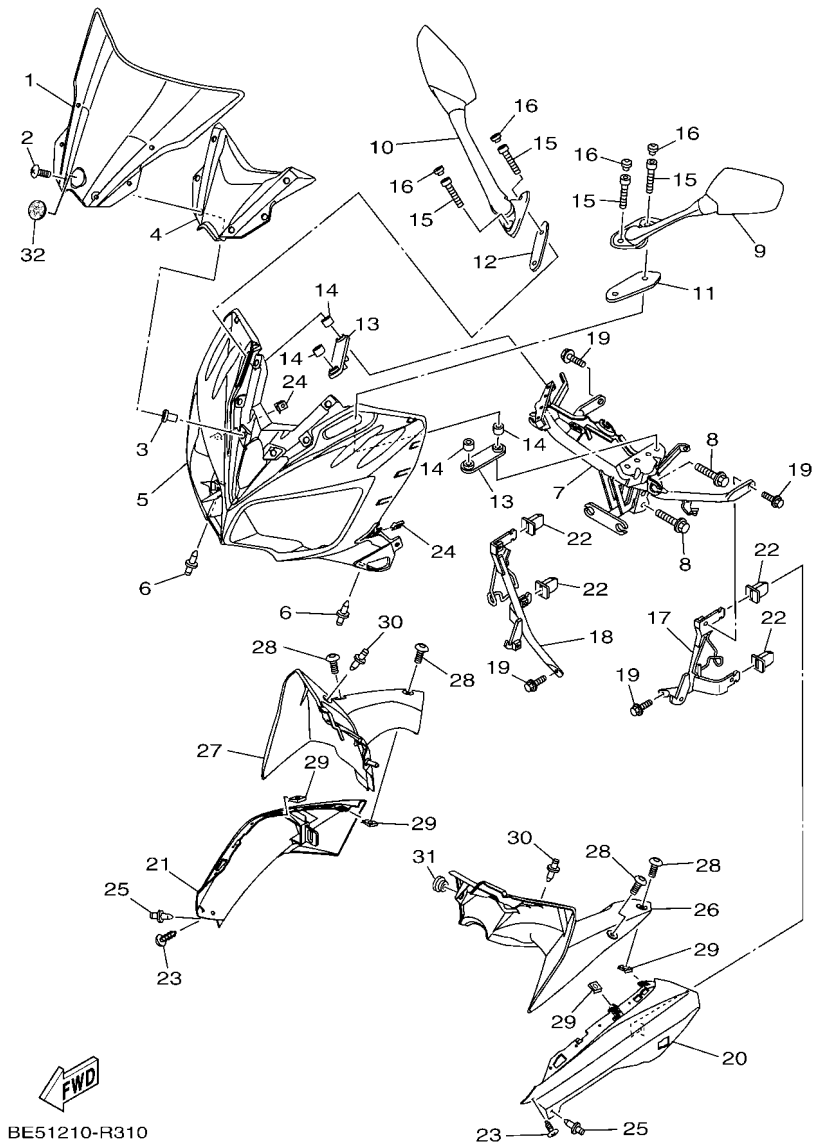

FIG. 31 BOVEDA 1 — COWLING 1

REF. Nº	CODIGO Nº PART NO.	DESCRIPCION DESCRIPTION	B733					OBSERVACIONES REMARKS
22	45S–F1778–00	AMORTIGUADOR DE MONTAJE DAMPER, LOCATING 1	4					
23	97702–50012	TORNILLO ROSCA HEMBRA SCREW, TAPPING	2					
24	90183–05807	TUERCA DE RESORTE NUT, SPRING	2					
25	90269–06814	REMACHE RIVET	2					
26	2WS–F837L–00	PANEL DE CONSOLA PANEL, CONSOLE 1	1					
27	2WS–F837M–00	PANEL, DE CONSOLA 2 PANEL, CONSOLE 2	1					
28	90160–05812	TORNILLO REDONDO ROSCA HEMBRA SCREW, ROUND TAPPING	4					
29	90183–05807	TUERCA DE RESORTE NUT, SPRING	4					
30	90269–06814	REMACHE RIVET	2					
31	90480–13567	TAPON GROMMET	1					
32	22P–F836B–00	MARCA TUNING FORK MARK	1					

FIG. 32 GENERADOR — GENERATOR

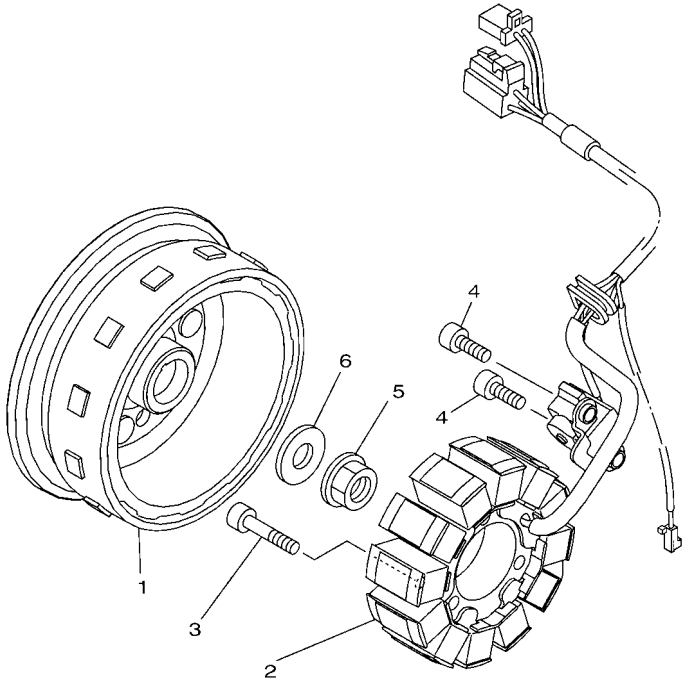

2GS1470-P310

REF. Nº	CODIGO Nº PART NO.	DESCRIPCION DESCRIPTION	B733					OBSERVACIONES REMARKS
1	2GS–H1450–00	ROTOR COMPLETO ROTOR ASSY	1					
2	2GS–H1410–00	ESTATOR COMPLETO STATOR ASSY	1					
3	91312–06030	TORNILLO BOLT	3					
4	91312–06016	TORNILLO BOLT	2					
5	95707–12500	TUERCA DE BRIDA NUT, FLANGE	1					
6	90201–12019	ARANDELA PLANA WASHER, PLATE	1					

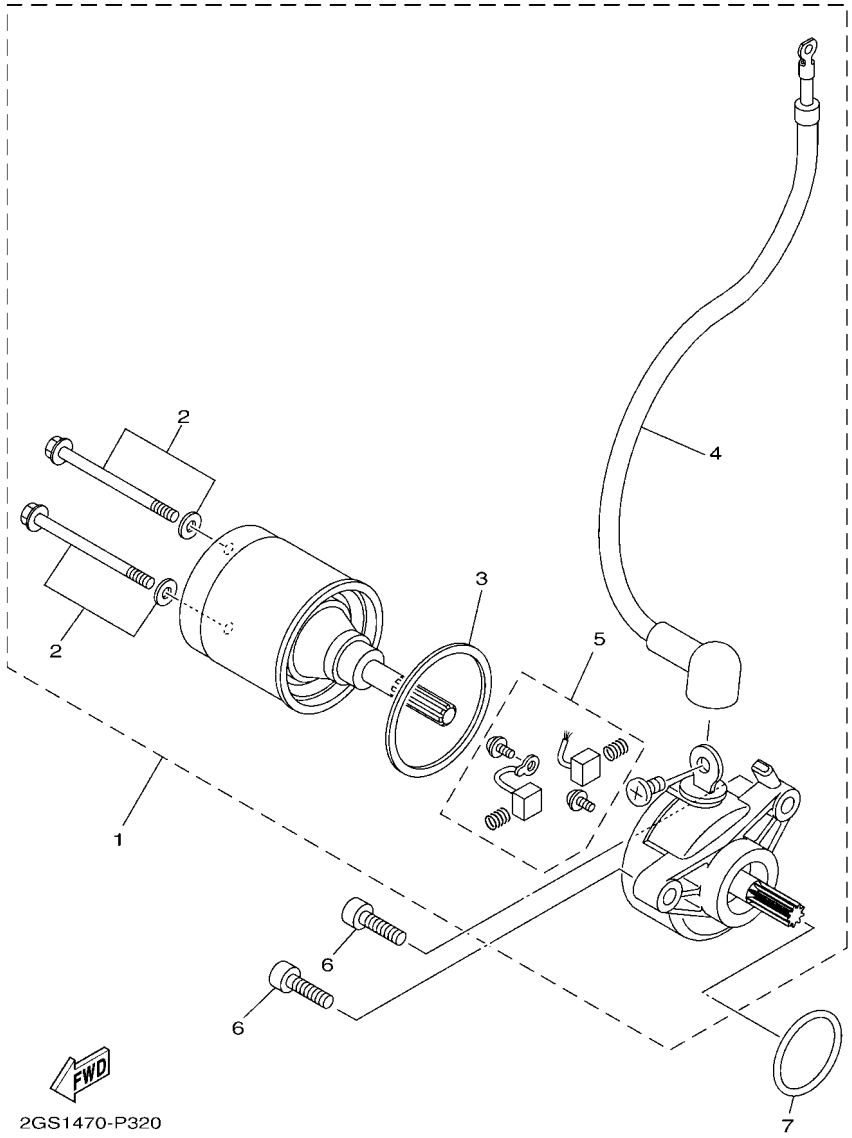

FIG. 33 MOTOR DE ARRANQUE — STARTING MOTOR

REF. Nº	CODIGO Nº PART NO.	DESCRIPCION DESCRIPTION	B733					OBSERVACIONES REMARKS
1	2GS–H1800–01	MOTOR DE ARRANQUE COMPLETO STARTING MOTOR ASSY	1					
2	5D9–H1828–00	.TORNILLO DE EMPUJE 2 .SCREW 2	2					
3	5D9–H1861–00	.EMPAQUETADURA .GASKET	1					
4	2GS–H183G–00	.CABLE DEL MOTOR COMPL. .CORD COMP.	1					
5	54S–H1801–00	.JUEGO DE ESCOBILLA .BRUSH SET	1					
6	91312–06020	TORNILLO BOLT	2					
7	93210–29807	ANILLO O O-RING	1					

FIG. 34 LUZ DE DESTELLADOR — FLASHER LIGHT

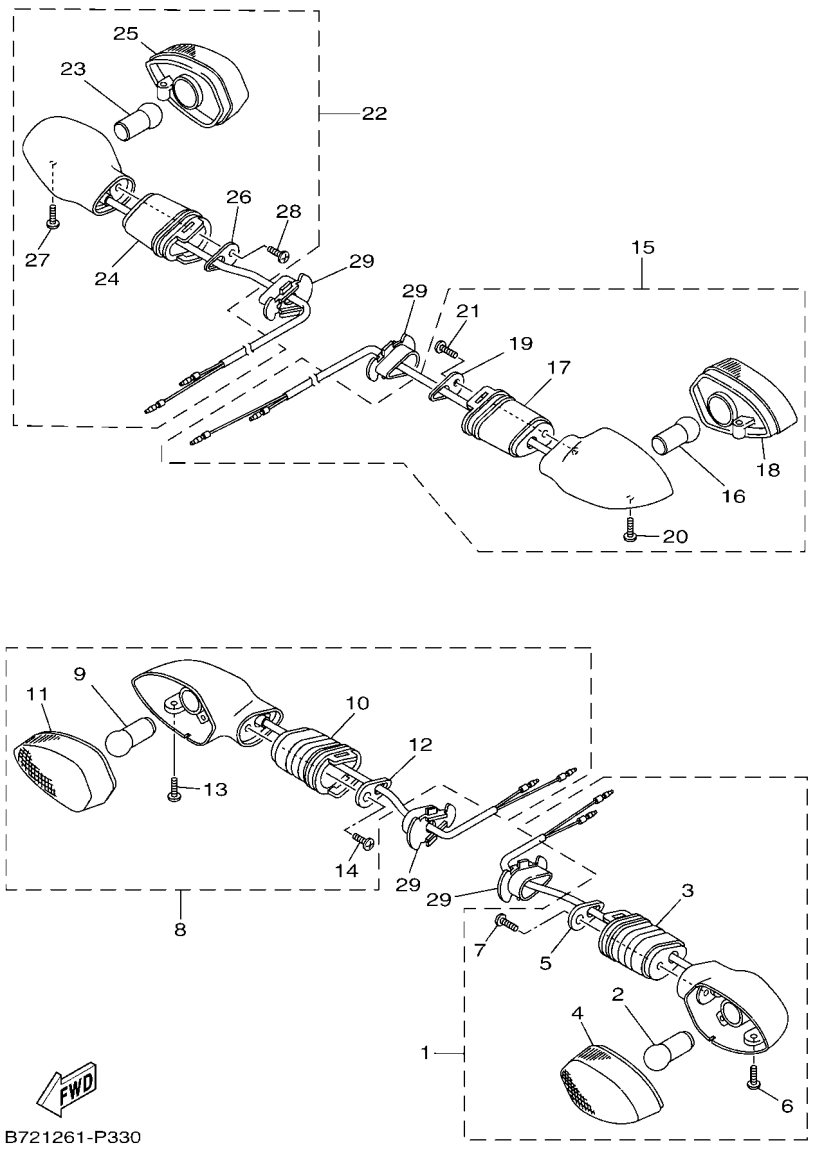

REF. Nº	CODIGO Nº PART NO.	DESCRIPCION DESCRIPTION	B733					OBSERVACIONES REMARKS
1	1EP–H3310–01	DESTELLADOR DE LUZ DELANT. FRONT FLASHER LIGHT ASSY 1	1					
2	45D–H3311–00	.BOMBILLA (12V-10W) .BULB, FLASHER (12V-10W)	1					
3	45D–H3318–00	.SOPORTE DE DESTELLADOR 1 .STAY, FLASHER 1	1					
4	45D–H333A–00	.LENTES COMPLETO 1 .LENS COMP 1	1					
5	45D–H3618–00	.PLACA .PLATE	1					
6	45D–H3333–00	.TORNILLO ACCESORIO DE LENTE .SCREW, LENS FITTING	1					
7	45D–H2133–00	.TORNILLO ACCESORIO .SCREW, FITTING	1					
8	1EP–H3320–01	DESTELLADOR DE LUZ DELANT. FRONT FLASHER LIGHT ASSY 2	1					
9	45D–H3311–00	.BOMBILLA (12V-10W) .BULB, FLASHER (12V-10W)	1					
10	45D–H3318–00	.SOPORTE DE DESTELLADOR 1 .STAY, FLASHER 1	1					
11	45D–H334A–00	.LENTES COMPLETO 2 .LENS COMP 2	1					
12	45D–H3618–00	.PLACA .PLATE	1					
13	45D–H3333–00	.TORNILLO ACCESORIO DE LENTE .SCREW, LENS FITTING	1					
14	45D–H2133–00	.TORNILLO ACCESORIO .SCREW, FITTING	1					
15	B72–H3330–00	DESTELLADOR DE LUZ TRAS.COMPL. REAR FLASHER LIGHT ASSY 1	1					
16	45D–H3311–00	.BOMBILLA (12V-10W) .BULB, FLASHER (12V-10W)	1					
17	45D–H3318–00	.SOPORTE DE DESTELLADOR 1 .STAY, FLASHER 1	1					
18	45D–H334A–00	.LENTES COMPLETO 2 .LENS COMP 2	1					
19	45D–H3618–00	.PLACA .PLATE	1					
20	45D–H3333–00	.TORNILLO ACCESORIO DE LENTE .SCREW, LENS FITTING	1					
21	45D–H2133–00	.TORNILLO ACCESORIO .SCREW, FITTING	1					
22	B72–H3340–00	DESTELLADOR DE LUZ TRAS.COMPL. REAR FLASHER LIGHT ASSY 2	1					
23	45D–H3311–00	.BOMBILLA (12V-10W) .BULB, FLASHER (12V-10W)	1					
24	45D–H3318–00	.SOPORTE DE DESTELLADOR 1 .STAY, FLASHER 1	1					
25	45D–H333A–00	.LENTES COMPLETO 1 .LENS COMP 1	1					
26	45D–H3618–00	.PLACA .PLATE	1					
27	45D–H3333–00	.TORNILLO ACCESORIO DE LENTE .SCREW, LENS FITTING	1					

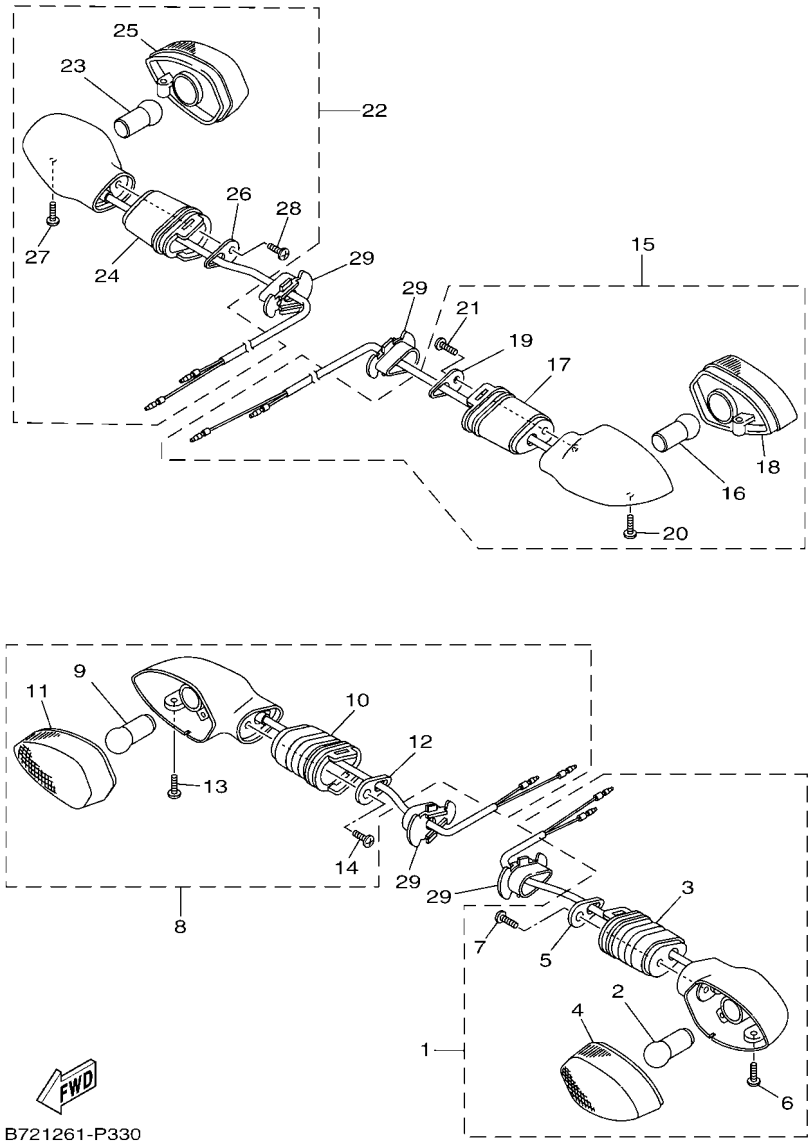

FIG. 34 LUZ DE DESTELLADOR — FLASHER LIGHT

REF. Nº	CODIGO Nº PART NO.	DESCRIPCION DESCRIPTION	B733					OBSERVACIONES REMARKS
28	45D–H2133–00	.TORNILLO ACCESORIO .SCREW, FITTING	1					
29	5YY–H3318–10	SOPORTE DE DESTELLADOR 1 STAY, FLASHER 1	4					

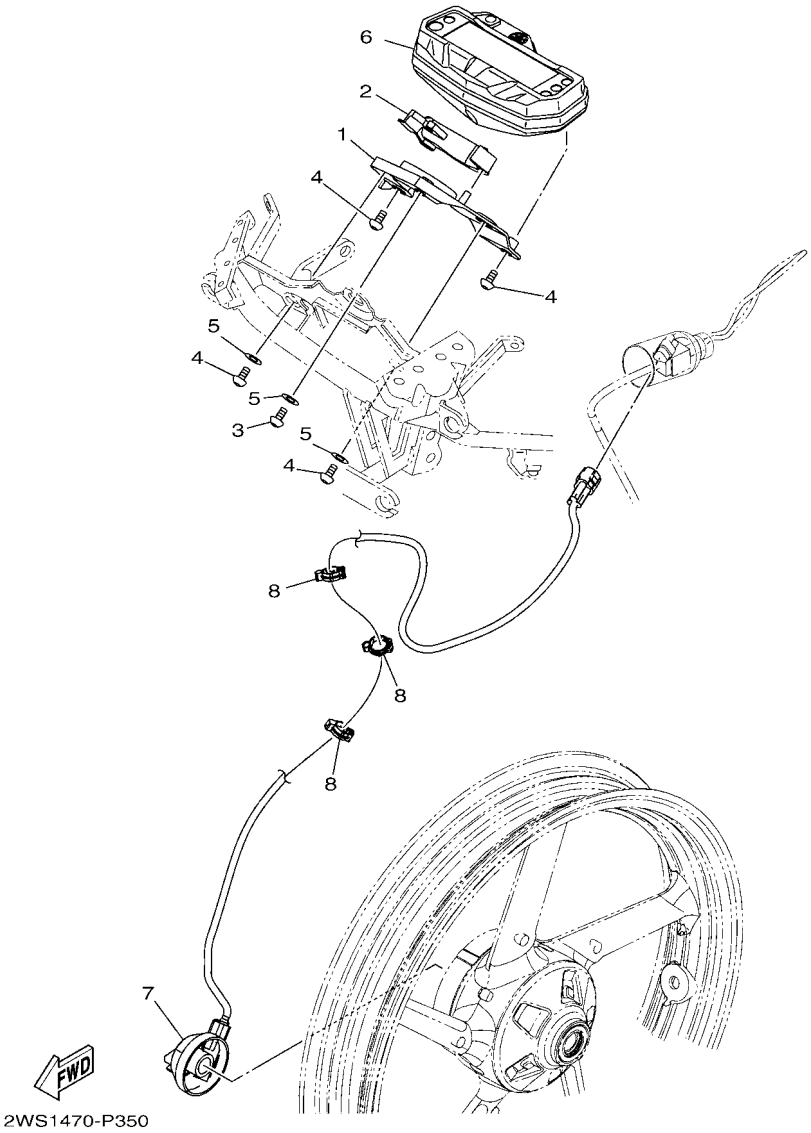

FIG. 35 MEDIDOR METER

REF. Nº	CODIGO Nº PART NO.	DESCRIPCION DESCRIPTION	B733					OBSERVACIONES REMARKS
1	2WS–F8213–00	PANEL BLINDADO PANEL, BLIND 1	1					
2	2WS–H3559–00	CUBIERTA DE MEDIDOR COVER, METER	1					
3	97702–50025	TORNILLO ROSCA HEMBRA SCREW, TAPPING	1					
4	97702–50014	TORNILLO ROSCA HEMBRA SCREW, TAPPING	4					
5	90201–05036	ARANDELA PLANA WASHER, PLATE	3					
6	2GS–H3500–00	METRO COMPLETO METER ASSY	1					
7	21C–H3756–03	SENSOR, UNIDAD SENSOR, UNIT	1					
8	90464–14803	BRIDA CLAMP	3					

FIG. 36 FARO DELANTERO HEADLIGHT

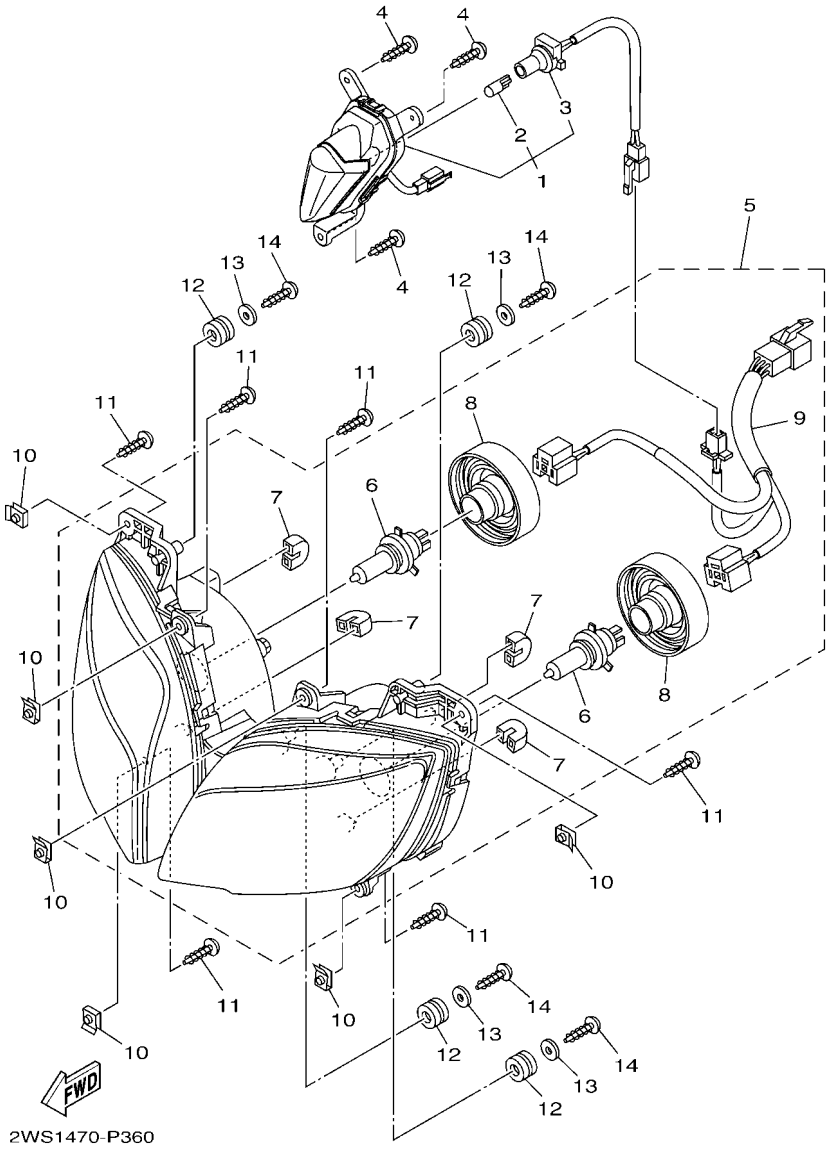

REF. Nº	CODIGO Nº PART NO.	DESCRIPCION DESCRIPTION	B733					OBSERVACIONES REMARKS
1	2WS–H4410–00	LUZ DE LA POSICION POSITION LIGHT ASSY 1	1					
2	21C–H4347–00	.AMPOLLETA (12V-5W) .BULB (12V-5W)	1					
3	45S–H414A–00	.SUPLEMENTO CABLES COMPLETO .CORD ASSY	1					
4	97707–40014	TORNILLO ROSCA HEMBRA SCREW, TAPPING	3					
5	B73–H4300–00	FARO DELANTERO COMPLETO HEADLIGHT ASSY	1					
6	20P–H4314–00	.AMPOLLETA (12V-35/35W) .BULB (12V-35/35W)	2					
7	45S–H4378–00	.TAPA .CAP	4					
8	20P–H4397–00	.CUBIERTA DE ENCASTRE .COVER, SOCKET	2					
9	B73–H453A–00	.CABLE COMPLETA .CORD ASSY	1					
10	90183–05807	TUERCA DE RESORTE NUT, SPRING	6					
11	97702–50016	TORNILLO ROSCA HEMBRA SCREW, TAPPING	6					
12	90480–14229	TAPON GROMMET	4					
13	90201–05036	ARANDELA PLANA WASHER, PLATE	4					
14	97702–50016	TORNILLO ROSCA HEMBRA SCREW, TAPPING	4					

FIG. 37 LUZ DE COLA — TAILLIGHT

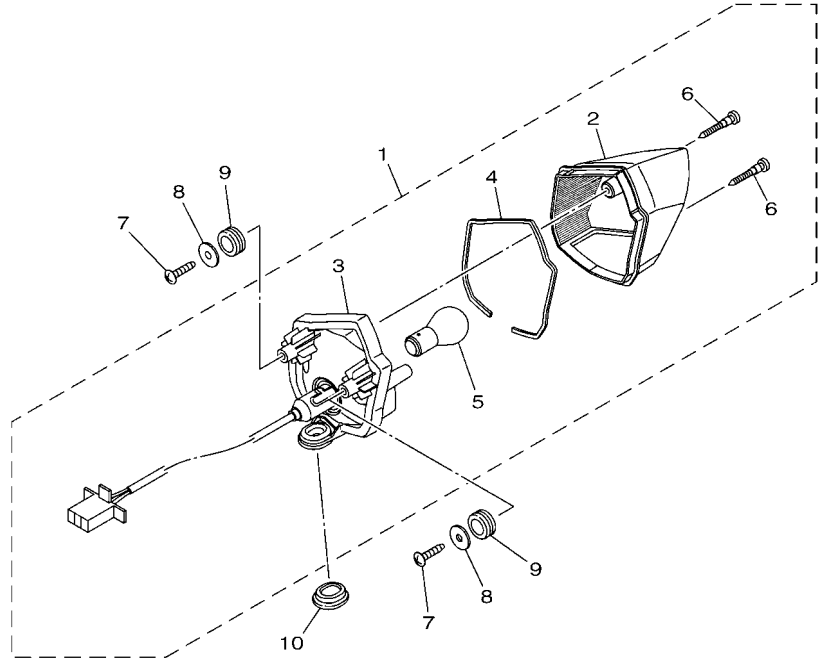

REF. Nº	CODIGO Nº PART NO.	DESCRIPCION DESCRIPTION	B733					OBSERVACIONES REMARKS
1	B72–H4710–00	UNIDAD FARO TRASERO COMPL. TAILLIGHT UNIT ASSY	1					
2	B72–H4721–00	.LENTE DE FARO TRASERO .LENS, TAILLIGHT	1					
3	B72–H4720–00	.BASE DE LUZ TRASERA .BASE ASSY	1					
4	2GS–H4723–00	.EMPAQUE LENTE FARO TRASERO .GASKET, TAIL LENS	1					
5	45D–H4714–00	.AMPOLLETA (12V-21/5W) .BULB (12V-21/5W)	1					
6	45D–H4724–00	.TORNILLO ACCESORIO DE LENTE .SCREW, LENS FITTING	2					
7	97702–50016	TORNILLO ROSCA HEMBRA SCREW, TAPPING	2					
8	90201–05036	ARANDELA PLANA WASHER, PLATE	2					
9	90480–14819	TAPON GROMMET	2					
10	90480–01558	TAPON GROMMET	1					

FIG. 38 INTERRUPTOR DE MANILLAR&PALANC HANDLE SWITCH & LEVER

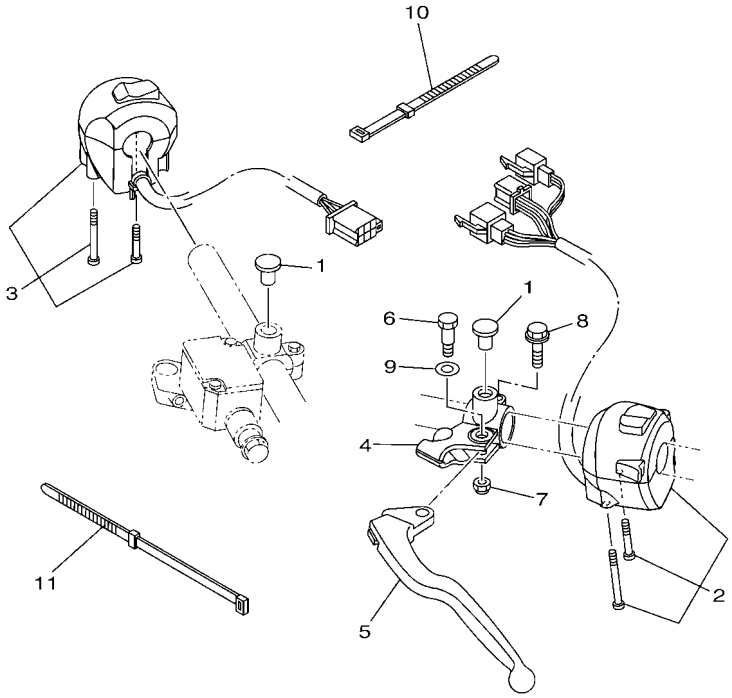

B731261-P380

REF. Nº	CODIGO Nº PART NO.	DESCRIPCION DESCRIPTION	B733					OBSERVACIONES REMARKS
1	90338–09802	TAPON PLUG	2					
2	2WS–H3972–00	INTERRUPTOR DE MANIJA 4 SWITCH, HANDLE 4	1					
3	B77–H3975–00	INTERRUPTOR DE MANIJA 2 SWITCH, HANDLE 2	1					
4	45D–H2911–00	SOPORTE DE LEVA 1 HOLDER, LEVER 1	1					
5	45D–H3912–00	PALANCA 1 LEVER 1	1					
6	36L–H3945–10	PERNO DE PALANCA BOLT, LEVER	1					
7	95707–06300	TUERCA DE BRIDA NUT, NYLON	1					
8	95027–06025	PERNO, DE BRIDA BOLT, FLANGE	1					
9	90201–08085	ARANDELA PLANA WASHER, PLATE	1					
10	36L–H3936–00	BANDA DE CABLE DE INTERRUPTOR BAND, SWITCH CORD	2					
11	45S–H3936–00	BANDA DE CABLE DE INTERRUPTOR BAND, SWITCH CORD	1					

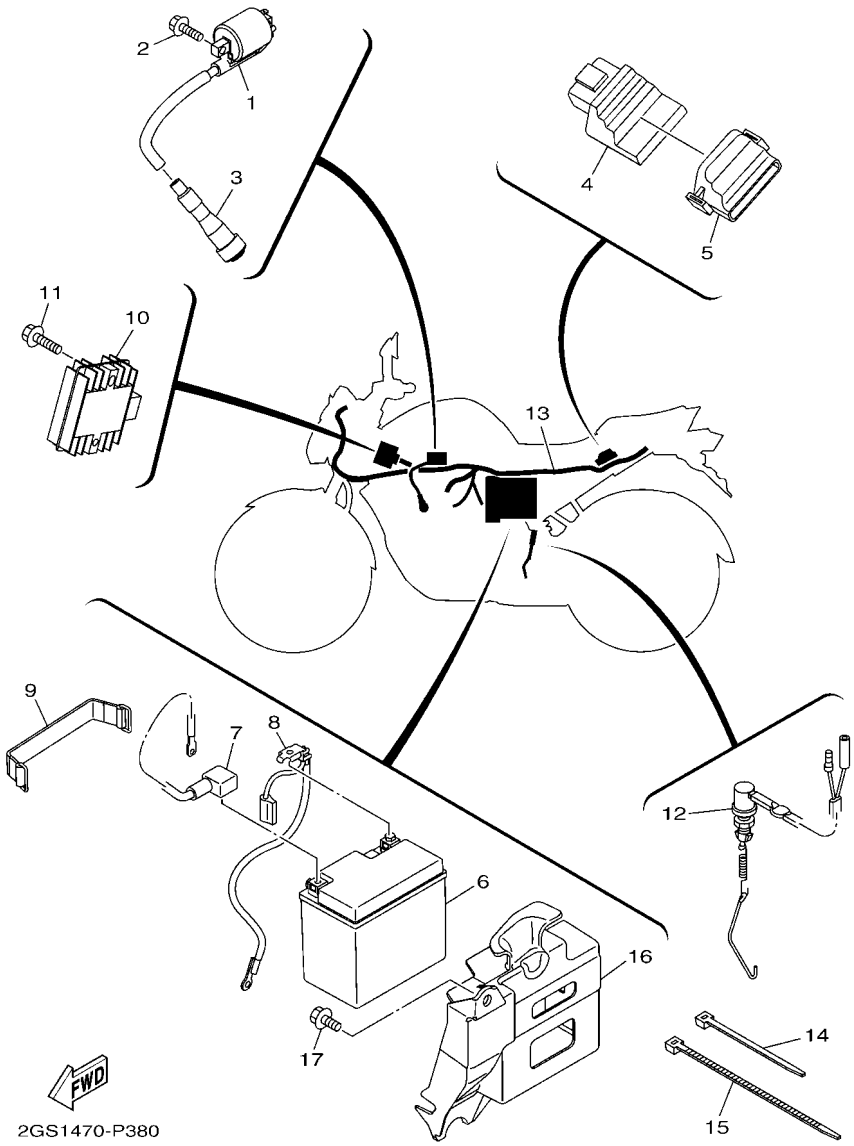

FIG. 39 EQUIPO ELECTRICO 1 — ELECTRICAL 1

REF. Nº	CODIGO Nº PART NO.	DESCRIPCION DESCRIPTION	B733					OBSERVACIONES REMARKS
1	2GS–H2310–00	BOBINA DE ENCENDIDO COMPLETA IGNITION COIL ASSY	1					
2	97502–05520	PERNO CON ARANDELA BOLT, WITH WASHER	2					
3	20P–H2370–02	TAPON DE BUJIA COMPLT PLUG CAP ASSY	1					
4	B77–H591A–02	UNIDAD CONTROL ENGINE CONTROL UNIT ASSY	1					
5	2GS–H5546–00	BANDA BAND	1					
6	1C6–H2100–10	BATERIA COMPLETA(YTX5L-BS 12V BATTERY (YTX5L-BS 12V 4AH)	1					
7	2GS–H2115–00	CABLE CONDUCTOR POSITIVO WIRE, PLUS LEAD	1					
8	2GS–H2116–00	CABLE CONDUCTOR NEGATIVO WIRE, MINUS LEAD	1					
9	5YY–H2131–10	TIRANTE DE BATERIA BAND, BATTERY	1					
10	2GS–H1960–00	RECTIFICADOR Y REGULADOR RECTIFIER & REGULATOR ASSY	1					
11	95802–06025	TORNILLO DE REBORDE BOLT, FLANGE	2					
12	21C–H2530–00	INTERRUPTOR DE PARADA COMPLETO STOP SWITCH ASSY	1					
13	2WS–H2590–00	CONJUNTO DE CABLES WIRE HARNESS ASSY	1					
14	90464–16061	BRIDA CLAMP	6					
15	90464–50800	BRIDA CLAMP	2					
16	2GS–F177G–00	CAJA DE BATERIA BOX, BATTERY	1					
17	90119–06137	TORNILLO CON ARANDELA BOLT, WITH WASHER	2					

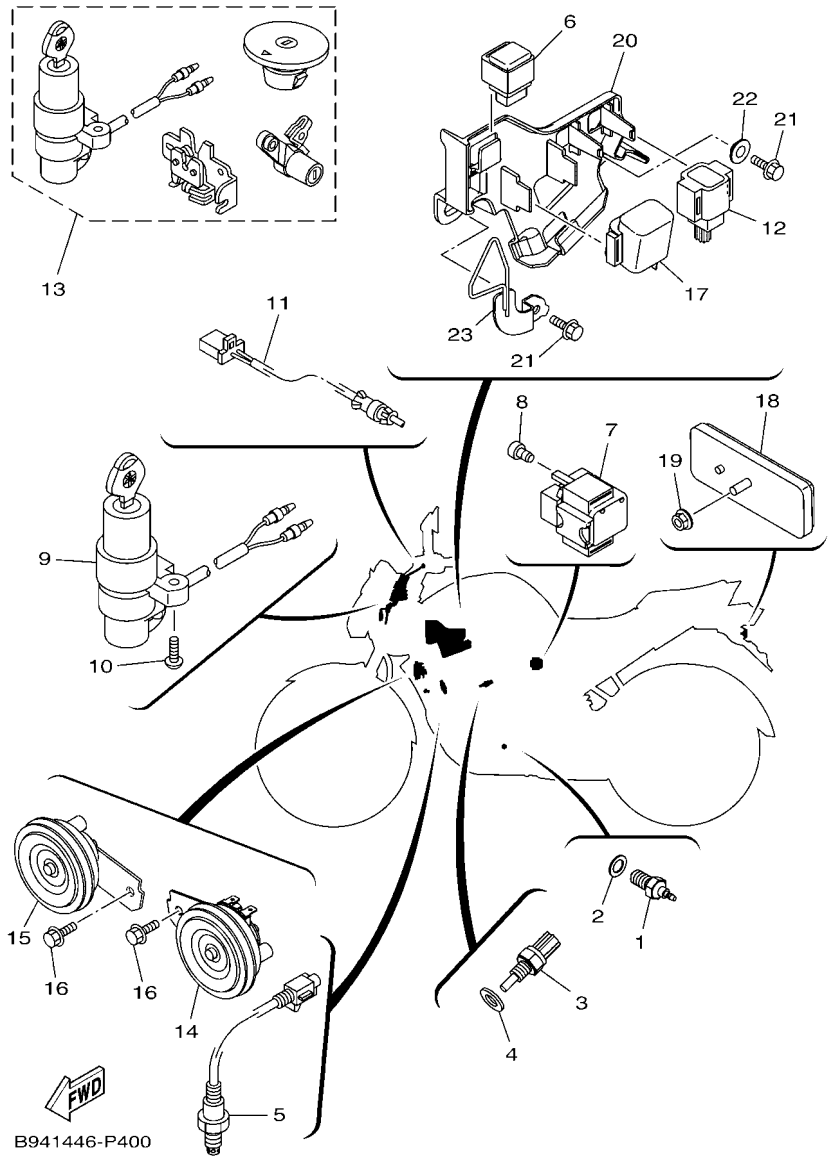

FIG. 40 EQUIPO ELECTRICO 2 — ELECTRICAL 2

REF. Nº	CODIGO Nº PART NO.	DESCRIPCION DESCRIPTION	B733					OBSERVACIONES REMARKS
1	21C–H2540–00	INTERRUPTOR NEUTRAL COMPL NEUTRAL SWITCH ASSY	1					
2	90430–10148	JUNTA GASKET	1					
3	52B–H3591–00	UNIDAD TERMOSTATO THERMO UNIT	1					
4	90201–10128	ARANDELA PLANA WASHER, PLATE	1					
5	2GS–H592A–00	SENSOR SENSOR, OXYGEN	1					
6	5YY–H1950–10	RELE COMPLETO RELAY ASSY	1					
7	2WS–H1940–00	CONJUNTO ARRANCADOR RELEVO STARTER RELAY ASSY	1					
8	91312–05008	TORNILLO BOLT	2					
9	2GS–H2501–00	LLAVE DE IGNICION COMPLT MAIN SWITCH STEERING LOCK	1					
10	90149–06118	TORNILLO DE REGLAJE SCREW	2					
11	21C–H2917–01	INTERRUPTOR SWITCH	1					
12	1PA–H2576–00	SENSOR ANGULO DE INCLINATION SENSOR, LEAN ANGLE	1					
13	2GS–XH250–10	LLAVE DE IGNICION COMPLT MAIN SW. STRG. LOCK SUB ASSY	1					AP AP
14	2WS–H3371–00	BOCINA HORN	1					
15	2WS–H3371–10	BOCINA HORN	1					
16	95827–06012	TORNILLO BOLT, FLANGE	2					
17	21C–H3350–00	RELE DE DESTELLADOR COMPL. FLASHER RELAY ASSY	1					
18	5US–H5110–01	REFLECTOR COMPLETO REFLECTOR ASSY	1					
19	95702–05500	TUERCA DE BRIDA NUT, FLANGE	1					
20	2GS–F418E–00	CAJA 1 BOX 1	1					
21	9580N–06016	TORNILLO BOLT, FLANGE	2					
22	90387–068S1	ESPACIADOR COLLAR	1					
23	2WS–F4885–00	GUIA DE CABLE GUIDE, WIRE	1					

INDICE NUMERICO
NUMERICAL INDEX

CODIGO Nº PART NO.	REF. Nº
2GS–12159–00	3 – 10
4FM–23125–40	20 – 6
2GS–E1102–00	1 – 1
2GS–E111F–00	4 – 4
2GS–E1165–00	1 – 6
2GS–E1166–00	6 – 26
21C–E1169–10	1 – 7
2GS–E1181–01	1 – 17
2GS–E1186–00	1 – 11
2GS–E1190–00	1 – 5
2GS–E1193–00	1 – 9
2GS–E1310–00	1 – 20
21C–E1351–00	1 – 21
2GS–E1361–00	1 – 15
2GS–E1400–09	2 – 1
2GS–E1422–00	2 – 5
2GS–E1454–00	2 – 14
54B–E1476–00	2 – 19
21C–E1496–20	2 – 16
21C–E1531–01	2 – 15
54B–E1536–01	2 – 12
2GS–E1603–00	2 – 11
2GS–E1605–00	2 – 11
2GS–E1607–00	2 – 11
2GS–E1631–00	2 – 8
21C–E1633–00	2 – 9
2GS–E1636–09	2 – 8
2GS–E1638–09	2 – 8
2GS–E1651–00	2 – 4
21C–E1681–01	2 – 2
2GS–E2111–00	3 – 1
2GS–E2113–00	3 – 5
2UP–E2117–00	3 – 7
3S0–E2118–00	3 – 6
38B–E2119–00	3 – 3
2GS–E2121–00	3 – 2
2GS–E2126–00	3 – 4
1ST–E2151–00	3 – 9
21C–E2156–00	3 – 12
52S–E2169–10	3 – 8
2GS–E2170–00	4 – 1
21C–E2210–02	4 – 13
2GS–E2213–00	4 – 14
21C–E2231–00	4 – 9
2GS–E2241–00	4 – 10
2GS–E2280–00	4 – 5
1PM–E2288–00	4 – 6
21C–E2435–11	1 – 12

CODIGO Nº PART NO.	REF. Nº
21C–E2437–00	4 – 16
21C–E2661–10	1 – 22
54B–E3300–00	5 – 1
21C–E3362–00	2 – 20
4LS–E3411–00	5 – 5
21C–E3440–00	5 – 6
21C–E3447–00	5 – 7
21C–E3449–00	5 – 10
2GS–E3557–00	6 – 6
2GS–E3585–00	6 – 1
2GS–E3635–00	6 – 8
2GS–E3645–00	6 – 3
B77–E3750–01	6 – 11
2GS–E3770–00	6 – 4
2GS–E3907–00	21 – 27
2GS–E3971–01	21 – 22
5CA–E4147–00	6 – 5
2GS–E4411–00	6 – 12
2GS–E4412–00	6 – 13
2GS–E4437–00	6 – 22
20P–E443E–00	6 – 19
2GS–E4450–00	6 – 14
2GS–E4452–00	6 – 16
2GS–E4453–00	6 – 15
21C–E4613–00	7 – 11
2GS–E4703–00	7 – 1
2GS–E4718–00	7 – 2
20P–E4747–00	7 – 10
	15 – 11
54B–E4757–00	7 – 8
21C–E4775–00	7 – 9
2GS–E4799–00	7 – 3
2GS–E4877–00	6 – 17
54B–E5111–00	8 – 1
54B–E5121–01	8 – 2
21C–E5155–00	8 – 3
45P–E5353–00	9 – 5
54B–E5362–00	9 – 21
2GS–E5411–00	9 – 3
2GS–E5418–00	9 – 13
21C–E5421–00	9 – 17
21C–E5441–00	9 – 1
21C–E5451–10	9 – 4
21C–E5461–10	9 – 18
1PM–E5514–00	10 – 1
21C–E5521–00	10 – 2
1PM–E5524–10	10 – 5
2GS–E5580–00	10 – 8

CODIGO Nº PART NO.	REF. Nº
4LS–E5598–00	4 – 11
21C–E5666–00	12 – 29
21C–E5666–00	11 – 1
21C–E6135–10	11 – 19
54B–E6144–00	11 – 17
2GS–E6150–00	11 – 6
21C–E6154–00	11 – 7
21C–E6193–00	11 – 3
54B–E6321–00	11 – 9
21C–E6324–00	11 – 11
21C–E6331–00	11 – 10
21C–E6333–00	11 – 13
21C–E6337–00	11 – 14
3C1–E6344–00	11 – 18
1PM–E6345–00	11 – 23
54B–E6351–00	11 – 12
21C–E6356–01	11 – 16
54B–E6357–00	11 – 24
21C–E6358–00	11 – 15
21C–E6371–00	11 – 8
21C–E6380–02	11 – 22
21C–E7121–10	12 – 5
B77–E7131–00	12 – 4
B77–E7141–00	12 – 6
B77–E7151–00	12 – 7
21C–E7211–20	12 – 20
21C–E7221–21	12 – 13
21C–E7231–31	12 – 16
B77–E7241–00	12 – 21
B77–E7251–00	12 – 22
21C–E7258–00	12 – 19
54B–E7258–00	11 – 2
21C–E7402–50	12 – 12
21C–E7411–50	12 – 1
4LS–E7456–00	12 – 27
21C–E7471–00	12 – 10
21C–E8101–01	14 – 4
45D–E8110–00	14 – 9
5VA–E8113–00	14 – 10
21C–E8140–00	14 – 1
21C–E8337–00	14 – 3
21C–E8511–00	13 – 2
21C–E8512–00	13 – 3
21C–E8513–00	13 – 4
21C–E8531–00	13 – 5
21C–E8535–00	13 – 6
2GS–E8540–00	13 – 1
B73–F1110–00	15 – 1

CODIGO Nº PART NO.	REF. Nº
2GS–F117K–00	23 – 11
B73–F117V–00–33	31 – 20
B73–F117V–00–P0	31 – 20
B73–F117V–00–P1	31 – 20
B73–F117W–00–33	31 – 21
B73–F117W–00–P0	31 – 21
B73–F117W–00–P1	31 – 21
2GS–F1279–00	15 – 14
B72–F1316–00	15 – 2
2GS–F1317–00	15 – 5
2WS–F137U–00	22 – 21
2WS–F137V–00	22 – 22
2GS–F144G–00	29 – 21
45D–F1511–10–P2	16 – 1
45D–F1511–10–P3	16 – 1
45D–F1511–10–P4	16 – 1
2GS–F1611–00	16 – 6
2GS–F1613–00	16 – 12
2GS–F1614–00	16 – 13
21C–F1638–02	15 – 13
2GS–F163A–00	16 – 15
2GS–F1644–00	18 – 13
2GS–F1645–00	18 – 14
2GS–F164F–00	18 – 15
2GS–F1650–00	18 – 12
2GS–F1651–00	16 – 14
45D–F1668–00	18 – 23
B72–F1711–10	17 – 1
21C–F1717–00	15 – 16
	17 – 9
B72–F171A–00–P0	21 – 15
B72–F171A–00–P3	21 – 15
B72–F171A–00–P4	21 – 15
B72–F171E–00–P0	17 – 15
B72–F171E–00–P3	17 – 15
B72–F171E–00–P4	17 – 15
2GS–F171L–00	17 – 22
2GS–F171M–00	17 – 23
B72–F1721–10	17 – 5
B72–F172A–10–P0	17 – 2
B72–F172F–10–P0	17 – 6
B72–F1731–00–33	17 – 10
B72–F1731–00–P0	17 – 10
B72–F1731–00–P3	17 – 10
2GS–F1732–00	17 – 25
2GS–F1735–00	17 – 26
B72–F1741–00–33	17 – 11
B72–F1741–00–P0	17 – 11

CODIGO Nº PART NO.	REF. Nº
B72–F1741–00–P3	17 – 11
45S–F1778–00	31 – 22
2GS–F177G–00	39 – 16
B72–F2110–10	18 – 1
20P–F2129–00	18 – 4
2GS–F2141–00	18 – 3
21C–F2147–00	18 – 20
2GS–F2151–00	18 – 8
21C–F2174–00	26 – 40
B72–F2210–00	18 – 24
B72–F3100–00	20 – 1
21C–F3110–00	20 – 4
21C–F3111–00	20 – 17
21C–F3114–00	20 – 18
21C–F3118–00	20 – 16
21C–F3126–11	20 – 2
21C–F3136–11	20 – 3
21C–F3141–00	20 – 14
2GS–F3144–00	20 – 10
2GS–F3145–00	20 – 8
21C–F3146–00	20 – 7
21C–F3149–00	20 – 15
21C–F3156–00	20 – 9
21C–F3158–00	20 – 12
2GS–F3170–00	20 – 5
21C–F3173–00	20 – 11
2WS–F317F–00	19 – 18
21C–F3181–00	20 – 13
21C–F3317–00	28 – 18
21C–F3340–02	20 – 19
21C–F3346–00	20 – 22
21C–F3411–00	20 – 21
21C–F3412–00	19 – 1
21C–F3413–00	19 – 2
21C–F3414–00	19 – 3
5YY–F3416–00	19 – 6
20P–F3418–00	19 – 8
4LS–F341E–00	19 – 5
4LS–F341E–10	19 – 4
21C–F3435–00	19 – 10
21C–F3441–00	19 – 16
5YY–F3462–00	20 – 20
20P–F3469–00	31 – 16
B72–F4110–10	21 – 1
45S–F411G–00	22 – 14
45S–F411H–00	22 – 15
2WS–F4124–00	22 – 18
B72–F4129–00–33	22 – 1

CODIGO Nº PART NO.	REF. Nº
B72–F4129–00–P0	22 – 1
B72–F4129–00–P2	22 – 1
B72–F4139–00–33	22 – 2
B72–F4139–00–P0	22 – 2
B72–F4139–00–P2	22 – 2
B73–F413B–00	22 – 28
2GS–F414A–00	21 – 16
2GS–F414G–00	21 – 29
21C–F4181–00	21 – 2
21C–F4183–00	21 – 4
21C–F4188–10	21 – 14
2GS–F418E–00	40 – 20
2GS–F4191–00	21 – 8
B73–F4245–00	22 – 3
B73–F4245–10	22 – 3
B73–F4245–20	22 – 3
B73–F4246–00	22 – 4
B73–F4246–10	22 – 4
B73–F4246–20	22 – 4
2GS–F4364–00	21 – 24
2GS–F4491–00	21 – 28
B72–F4549–00	21 – 26
21C–F4614–00–P0	21 – 18
B72–F4710–01	23 – 1
1PM–F4741–00	15 – 15
2GS–F4741–00	23 – 5
45D–F4741–00	23 – 2
4LS–F4741–00	23 – 6
2GS–F474A–00	23 – 13
2GS–F474W–00	23 – 14
B72–F4750–01	23 – 4
21C–F4780–01	23 – 7
2GS–F478E–00	23 – 9
2WS–F4885–00	40 – 23
21C–F510C–10	24 – 2
21C–F5168–20–33	24 – 1
2GS–F5181–00	24 – 8
21C–F5183–01	24 – 7
21C–F530S–10	26 – 2
5US–F5321–10	26 – 6
21C–F5338–20–33	26 – 1
36L–F533A–00	26 – 14
5YY–F5351–00	26 – 10
21C–F5355–01	26 – 11
21C–F5364–00	26 – 5
20P–F5366–00–33	26 – 15
21C–F5371–00	26 – 24
20P–F5377–00	26 – 17

INDICE NUMERICO
NUMERICAL INDEX

CODIGO Nº PART NO.	REF. Nº
21C–F5377–01	26 – 33
2GS–F5381–00	26 – 32
21C–F5383–10	26 – 34
21C–F5388–11	26 – 39
B72–F5441–00	26 – 19
2GS–F580U–00	25 – 3
21C–F582U–00	25 – 1
54B–F5852–00	28 – 7
54B–F5854–00	28 – 6
54B–F5855–00	28 – 11
5YY–F5867–00	28 – 9
21C–F5872–00	28 – 1
45S–F5875–00	28 – 16
45S–F5876–00	28 – 17
54B–F589H–00	28 – 8
54B–F5916–00	25 – 10
54B–F5917–00	25 – 13
54B–F5919–00	25 – 6
54B–F5924–00	25 – 9
54B–F5925–00	25 – 11
54B–F5926–00	25 – 14
54B–F5937–00	25 – 12
1EP–F6111–00	27 – 1
45S–F6131–00	19 – 11
45S–F6132–00	19 – 12
21C–F620B–21	27 – 11
21C–F6240–10	27 – 10
21C–F6241–00	27 – 9
2WS–F6280–00	31 – 9
2WS–F6290–00	31 – 10
2GS–F6311–00	27 – 2
2GS–F6312–00	27 – 3
21C–F6335–02	27 – 5
54B–F6338–00	28 – 15
4TL–F6372–00	27 – 6
1EP–F7111–00	30 – 1
21C–F7114–00	30 – 4
45D–F7211–00	29 – 23
45D–F7231–00	30 – 7
45D–F7261–00	29 – 9
	29 – 25
45D–F7311–00	30 – 15
21C–F7413–01	29 – 6
	29 – 18
2GS–F7414–00	29 – 11
2GS–F7424–00	29 – 27
20P–F7431–00	30 – 22
20P–F7441–00	30 – 23

CODIGO Nº PART NO.	REF. Nº
45D–F7451–00	29 – 1
B72–F7452–00	29 – 2
45D–F7461–00	29 – 13
B72–F7462–00	29 – 14
21C–F8100–20	16 – 20
4UU–F811G–00	16 – 11
2WS–F8213–00	35 – 1
45S–F831T–00	31 – 17
45S–F832T–00	31 – 18
45S–F8356–02	31 – 7
B73–F835G–00–33	31 – 5
B73–F835G–00–P0	31 – 5
B73–F835G–00–P1	31 – 5
B73–F835U–00–P0	22 – 25
B73–F835U–00–P1	22 – 25
B73–F835U–00–P2	22 – 25
B73–F835V–00–P0	22 – 26
B73–F835V–00–P1	22 – 26
B73–F835V–00–P2	22 – 26
22P–F836B–00	17 – 20
	31 – 32
2WS–F836K–00	31 – 4
2WS–F837L–00	31 – 26
2WS–F837M–00	31 – 27
2WS–F8381–00	31 – 1
B73–F8391–00	22 – 5
B73–F8391–10	22 – 5
B73–F8391–20	22 – 5
B73–F8392–00	22 – 6
B73–F8392–10	22 – 6
B73–F8392–20	22 – 6
B73–F8393–00	22 – 7
B73–F8393–10	22 – 7
B73–F8393–20	22 – 7
B73–F8394–00	22 – 8
B73–F8394–10	22 – 8
B73–F8394–20	22 – 8
45S–F8483–00	31 – 11
45S–F8484–00	31 – 12
45S–F8485–00	31 – 13
2GS–H1410–00	32 – 2
2GS–H1450–00	32 – 1
2GS–H1800–01	33 – 1
54S–H1801–00	33 – 5
5D9–H1828–00	33 – 2
2GS–H183G–00	33 – 4
5D9–H1861–00	33 – 3
2WS–H1940–00	40 – 7

CODIGO Nº PART NO.	REF. Nº
5YY–H1950–10	40 – 6
2GS–H1960–00	39 – 10
2GS–H1960–00	39 – 6
2GS–H2115–00	39 – 7
2GS–H2116–00	39 – 8
5YY–H2131–10	39 – 9
45D–H2133–00	34 – 7
	34 – 14
	34 – 21
	34 – 28
2GS–H2310–00	39 – 1
20P–H2370–02	39 – 3
2GS–H2501–00	40 – 9
21C–H2530–00	39 – 12
21C–H2540–00	40 – 1
1PA–H2576–00	40 – 12
2WS–H2590–00	39 – 13
45D–H2911–00	38 – 4
21C–H2917–01	40 – 11
1EP–H3310–01	34 – 1
45D–H3311–00	34 – 2
	34 – 9
	34 – 16
	34 – 23
45D–H3318–00	34 – 3
	34 – 10
	34 – 17
	34 – 24
5YY–H3318–10	34 – 29
1EP–H3320–01	34 – 8
B72–H3330–00	34 – 15
45D–H3333–00	34 – 6
	34 – 13
	34 – 20
	34 – 27
45D–H333A–00	34 – 4
	34 – 25
B72–H3340–00	34 – 22
45D–H334A–00	34 – 11
	34 – 18
21C–H3350–00	40 – 17
2WS–H3371–00	40 – 14
2WS–H3371–10	40 – 15
2GS–H3500–00	35 – 6
2WS–H3559–00	35 – 2
52B–H3591–00	40 – 3
45D–H3618–00	34 – 5
	34 – 12

CODIGO Nº PART NO.	REF. Nº
45D–H3618–00	34 – 19
	34 – 26
21C–H3756–03	35 – 7
45D–H3912–00	38 – 5
54B–H3922–00	28 – 13
36L–H3936–00	38 – 10
45S–H3936–00	38 – 11
36L–H3945–10	38 – 6
2WS–H3972–00	38 – 2
B77–H3975–00	38 – 3
54B–H3980–01	28 – 12
45S–H414A–00	36 – 3
B73–H4300–00	36 – 5
20P–H4314–00	36 – 6
21C–H4347–00	36 – 2
45S–H4378–00	36 – 7
20P–H4397–00	36 – 8
2WS–H4410–00	36 – 1
B73–H453A–00	36 – 9
B72–H4710–00	37 – 1
45D–H4714–00	37 – 5
B72–H4720–00	37 – 3
B72–H4721–00	37 – 2
2GS–H4723–00	37 – 4
45D–H4724–00	37 – 6
5US–H5110–01	40 – 18
2GS–H5546–00	39 – 5
B77–H591A–02	39 – 4
2GS–H592A–00	40 – 5
54B–W0041–00	28 – 5
2GS–W0045–00	25 – 8
54B–W0047–00	25 – 5
54B–W0048–00	25 – 7
54B–W0057–00	25 – 4
21C–WF461–11	21 – 21
21C–WF479–00	23 – 10
5YY–WF533–00	26 – 7
54B–WF587–00	28 – 4
2GS–XH250–00	40 – 13
90101–06046	26 – 12
90101–10812	30 – 18
90105–06169	21 – 12
90105–06859	28 – 10
90105–08002	15 – 6
90105–08196	4 – 7
90105–10319	25 – 15
90105–10861	15 – 10
90105–12057	18 – 26

CODIGO Nº PART NO.	REF. Nº
90105–12804	18 – 27
90109–06259	14 – 2
90109–06859	28 – 14
90109–08063	26 – 25
90109–08202	29 – 8
	29 – 20
90109–08831	26 – 29
90110–06256	1 – 24
90110–06304	1 – 19
90110–06393	4 – 15
90111–05035	5 – 2
90111–06117	16 – 5
90111–06807	7 – 7
90111–06826	7 – 6
90111–08029	25 – 2
90116–08826	26 – 20
90119–06060	18 – 19
90119–06137	17 – 17
	39 – 17
90123–08046	27 – 7
90149–05807	1 – 8
90149–06118	40 – 10
90149–06829	4 – 12
	16 – 16
90150–05024	31 – 2
90159–05065	21 – 19
90159–06054	23 – 12
90160–05812	22 – 11
	31 – 28
90170–05302	3 – 11
90170–10012	2 – 26
90171–14800	24 – 9
	26 – 35
90176–22081	19 – 15
90179–05804	21 – 20
	31 – 3
90179–06806	30 – 14
90179–08148	27 – 8
90179–08674	15 – 8
90179–10811	15 – 4
90179–12802	11 – 5
90179–14001	11 – 20
90179–25615	19 – 7
90183–05067	17 – 24
90183–05807	17 – 3
	17 – 7
	17 – 12
	22 – 13

CODIGO Nº PART NO.	REF. Nº
90183–05807	22 – 24
	31 – 24
	31 – 29
	36 – 10
90183–06800	16 – 17
	18 – 18
90185–10811	30 – 21
90201–05036	35 – 5
	36 – 13
	37 – 8
90201–05820	1 – 23
90201–06055	17 – 19
90201–060A3	18 – 10
	21 – 9
90201–06380	21 – 10
90201–06871	14 – 13
90201–08085	38 – 9
90201–08326	26 – 27
90201–08612	7 – 13
90201–087F0	7 – 17
90201–10128	40 – 4
90201–105E8	10 – 3
90201–10815	28 – 3
90201–10841	29 – 10
	29 – 26
	30 – 20
90201–12019	11 – 4
	32 – 6
90201–12028	18 – 7
90201–122H1	18 – 29
90201–15022	2 – 17
90201–15814	26 – 37
90201–178D3	12 – 18
	12 – 30
90201–22018	19 – 14
90201–22793	12 – 14
90201–25290	10 – 7
90202–05180	22 – 12
90202–26142	19 – 9
90208–20003	11 – 21
90209–17285	12 – 2
90209–18208	12 – 17
90214–10006	2 – 18
90215–10284	2 – 25
90240–06804	30 – 10
90249–12008	30 – 13
90252–55800	24 – 10
	26 – 36

INDICE NUMERICO
NUMERICAL INDEX

CODIGO Nº PART NO.	REF. Nº
90269–06814	17 – 14
	17 – 16
	31 – 6
	31 – 25
	31 – 30
90280–03017	2 – 7
90282–05031	2 – 24
90338–09802	38 – 1
90338–30802	9 – 24
90340–12808	5 – 3
90340–14117	9 – 9
90340–32805	9 – 11
90387–06023	7 – 5
90387–06048	16 – 8
	16 – 19
	22 – 19
90387–066J9	18 – 9
90387–06737	6 – 23
90387–068B2	21 – 6
90387–068C2	31 – 14
90387–068C5	16 – 2
90387–068C9	9 – 15
90387–068N2	18 – 16
90387–068S1	18 – 21
	40 – 22
90387–07819	19 – 20
90387–08079	16 – 10
90387–08822	15 – 12
90387–09806	6 – 24
90387–10003	30 – 19
90387–107H6	21 – 7
90387–10822	30 – 2
90387–12845	18 – 25
90387–12863	18 – 2
90387–155J0	2 – 21
90387–20813	2 – 13
90401–10818	28 – 2
90430–06817	1 – 3
	1 – 14
90430–10148	40 – 2
90430–12227	5 – 4
90445–13806	30 – 17
90445–14808	21 – 17
90450–43807	6 – 9
90450–48805	6 – 10
90464–14803	35 – 8
90464–16006	21 – 23
90464–16061	39 – 14

CODIGO Nº PART NO.	REF. Nº
90464–50800	39 – 15
90464–80802	21 – 5
90467–12800	6 – 20
90467–13816	6 – 27
90467–15803	6 – 28
90467–20050	6 – 18
90480–01558	17 – 21
	37 – 10
90480–01559	22 – 10
90480–08801	16 – 3
90480–12812	7 – 4
	9 – 16
90480–13398	22 – 9
90480–13567	31 – 31
90480–14229	36 – 12
90480–14819	37 – 9
90480–14828	22 – 16
90480–15363	21 – 3
90501–06800	13 – 7
90501–10815	30 – 12
90501–12743	30 – 26
90506–12001	26 – 8
90506–15001	26 – 9
90506–23807	30 – 16
90506–26807	29 – 24
90506–35816	30 – 3
90508–183B9	29 – 3
	29 – 15
90508–32805	14 – 5
91312–05008	40 – 8
91312–05010	21 – 30
91312–05016	3 – 13
91312–06014	9 – 2
91312–06016	4 – 17
	32 – 4
91312–06020	10 – 9
	33 – 6
91312–06025	6 – 2
91312–06030	32 – 3
91317–06030	31 – 15
91401–20012	14 – 11
	26 – 28
	30 – 8
91401–25015	29 – 5
	29 – 17
	30 – 25
91701–08035	30 – 24
91701–08040	29 – 4

CODIGO Nº PART NO.	REF. Nº
91701–08040	29 – 16
91810–14804	1 – 18
91810–14804	8 – 4
	9 – 6
	9 – 19
92902–06200	30 – 9
	30 – 11
92902–08200	23 – 16
	26 – 31
92902–08600	26 – 41
92907–06200	14 – 12
92907–14200	24 – 11
93101–10838	9 – 23
93102–12875	14 – 8
93102–12877	11 – 27
93102–22818	12 – 25
93106–22808	24 – 3
	26 – 4
93106–26801	26 – 18
93210–14899	9 – 10
93210–19809	9 – 22
93210–29807	33 – 7
93210–32814	9 – 12
93306–002YV	4 – 3
93306–054Y5	26 – 16
93306–054Y6	12 – 8
93306–054YA	26 – 16
93306–054YE	12 – 8
93306–201Y4	12 – 9
93306–203XR	12 – 23
93306–252XG	24 – 4
	26 – 3
93306–252YG	2 – 22
93306–252YH	24 – 4
	26 – 3
93306–253Y6	2 – 23
93306–272X1	12 – 24
93306–272X4	12 – 24
93306–305YC	2 – 6
93310–325X3	10 – 6
93310–628X0	2 – 3
93315–112Y9	11 – 26
93317–318Y5	18 – 5
93410–20809	12 – 3
93410–22039	12 – 15
93450–16812	2 – 10
93501–04805	30 – 27
93505–16844	11 – 25

CODIGO Nº PART NO.	REF. Nº
93605–06800	4 – 2
93608–43238	14 – 7
93822–14800	12 – 26
93900–00824	24 – 6
	26 – 23
94110–17818	24 – 5
94114–17801	26 – 22
94568–B5128	26 – 38
94568–G2096	4 – 8
94703–00885	1 – 16
95022–06010	12 – 28
	23 – 8
95022–06012	1 – 2
95022–06020	5 – 8
95022–06025	1 – 10
	1 – 13
95022–06040	9 – 7
	9 – 20
95022–06045	8 – 7
95022–06050	9 – 8
95022–06055	8 – 6
95022–06065	5 – 9
95022–06070	8 – 8
95022–08012	23 – 3
95022–08035	19 – 17
95022–08040	19 – 13
95027–06016	18 – 11
	18 – 17
	18 – 22
95027–06025	38 – 8
95302–08600	26 – 30
	26 – 42
95302–08700	26 – 26
95307–06600	26 – 13
95602–08200	26 – 21
95602–10200	30 – 5
95607–12200	18 – 6
95612–08635	1 – 4
95612–12100	18 – 28
95702–05500	40 – 19
95702–08500	7 – 12
95707–06300	38 – 7
95707–12500	32 – 5
95802–06010	8 – 5
	29 – 22
95802–06012	22 – 17
95802–06020	9 – 14
	16 – 4

CODIGO Nº PART NO.	REF. Nº
95802–06025	39 – 11
95802–08025	7 – 14
95802–08035	7 – 15
9580N–06016	40 – 21
95812–06012	19 – 21
	31 – 19
95812–06030	6 – 7
95812–08016	15 – 7
95812–08025	23 – 15
	29 – 12
	29 – 28
95812–08035	31 – 8
95812–08040	7 – 16
95812–10035	30 – 6
95812–10080	15 – 3
95817–10130	15 – 9
95822–06016	6 – 25
	16 – 9
	19 – 19
95822–06030	21 – 13
95827–06012	22 – 20
	40 – 16
97012–06014	16 – 7
	16 – 18
	21 – 11
97012–06020	14 – 14
97502–05520	39 – 2
97602–05320	6 – 21
97702–50012	17 – 4
	17 – 8
	17 – 13
	21 – 25
	22 – 23
	22 – 27
	31 – 23
97702–50014	35 – 4
97702–50016	36 – 11
	36 – 14
	37 – 7
97702–50025	35 – 3
97707–40014	36 – 4
98502–05014	29 – 7
	29 – 19
98502–06012	12 – 11
98502–06014	17 – 18
98507–05012	27 – 4
99001–10600	14 – 6
99009–10400	10 – 4

CODIGO Nº PART NO.	REF. Nº
99009–17400	12 – 31
99009–20500	11 – 28